Operator Manual (EN)

Models:

28" & 32" Disk
26" & 30" Cylindrical
24" & 28" Orbital

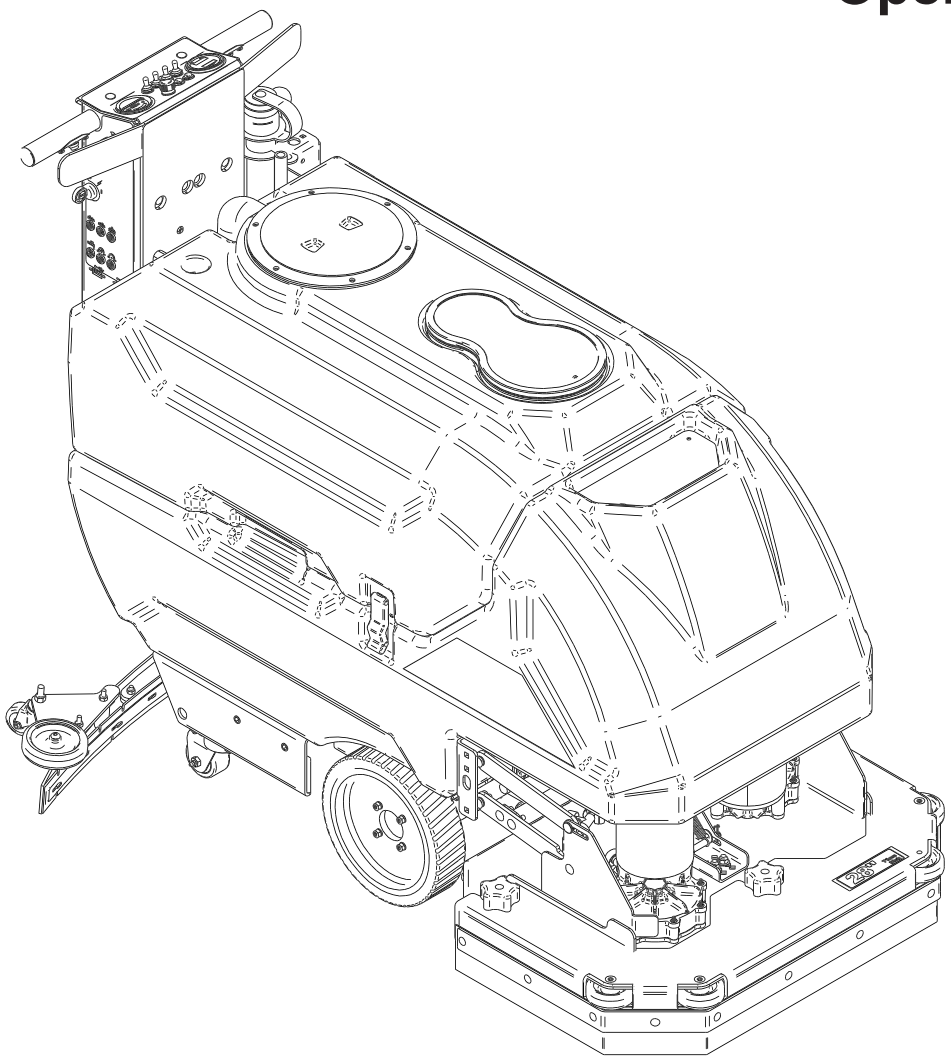

Read the Operators Manual before using the machine.

Read the Safety Messages before servicing machine.

www.timberlineclean.com
1711 South Street
Racine, WI 53404 (USA)
262-833-4040 | (877) 401-0730
© 2020 RPS Corporation

V20.153
T-L-SERIES-OP-EN

INTRODUCTION

This manual is furnished with each new machine. This manual will allow the Operator to get the best performance out of your RPS manufactured Scrubber-Drier, Sweeper, Burnisher, or Orbital Scrubber. Read this manual thoroughly before operating or servicing the machine.

This machine will provide excellent performance, but the best results will be obtained at the most minimum costs if:
• The machine is regularly maintained - per the Authorized Local Distributor.

• The machine is operated with reasonable care and caution.

• The machine is maintained with manufacturer supplied parts.

Locate Serial Number

The serial number of your machine is located on the lower half of the control panel of the machine.

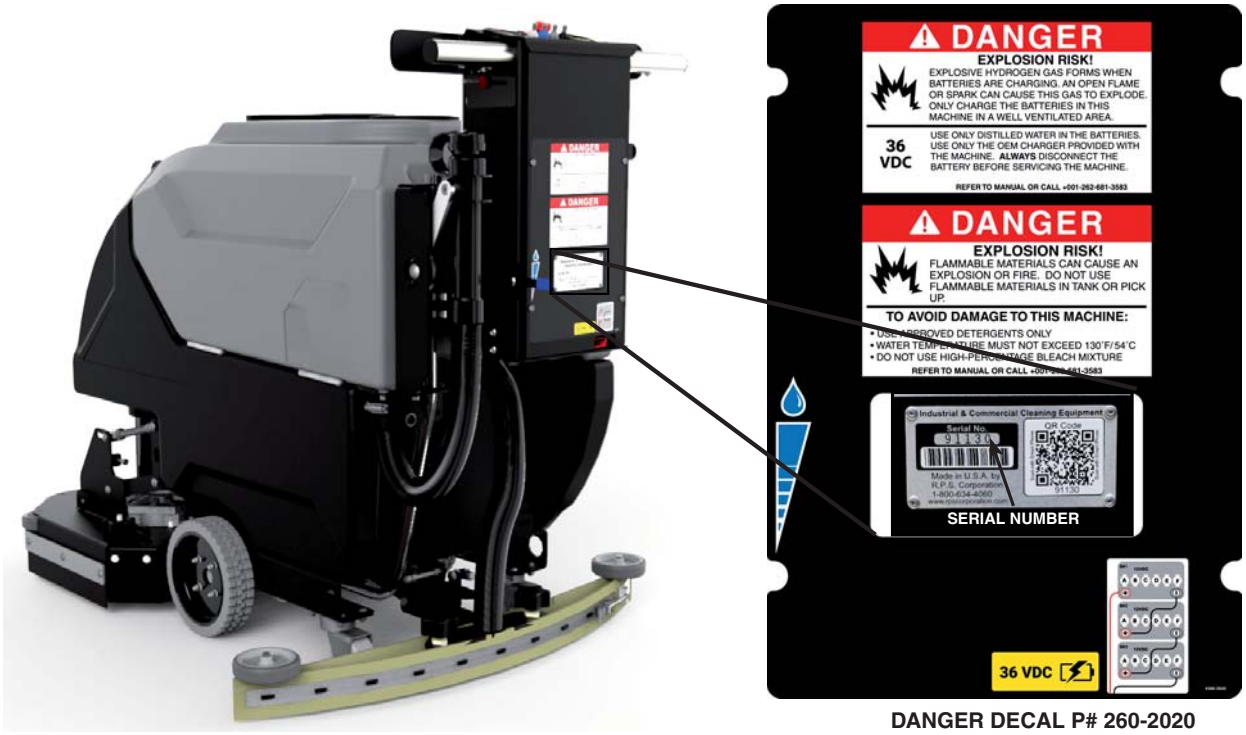

DANGER DECAL P# 260-2020

AS OUR POLICY IS ONE OF CONSTANT IMPROVEMENT - ALL INFORMATION AND SPECIFICATIONS ARE SUBJECT TO CHANGE WITHOUT NOTICE.

Intended use

The Timberline L-Series walk-behind scrubber is intended for commercial applications with hard floor surfaces such as concrete, VCT, tile and grout, stone, ect. This machine is not designed to clean carpets or sand wooden surfaces. Use only OEM pads/brushes and commercially available floor cleaning detergents. Do not use this machine other than described in this Operator Manual.

Machine Data

Fill out while installing machine for future reference.

Model No. - _____

Serial No. - _____

Installation Date - _____

Uncrating Machine

Inspect machine for damage before unloading, if any damage has occurred report it to the carrier. Contact distributor or RPS Corp. for missing components.
Remove protective shipping frame then locate and unscrew the metal bracket connecting the machine to the pallet. Before removal the scrub head should be in the raised position. Using the supplied ramp carefully back the machine off the pallet.

INTRODUCTION
Locate Serial Number 2
Intended use 2
Machine Data 2
Uncrating Machine 2

SAFETY
Important Safety Messages 4
Safety Labels 5

OPERATION
Machine Overview 6
Central Command Overview 7
Squeegee Installation 8
Squeegee Adjustment 9
Battery Setup 10
Battery Charger Use 11
Forward Drive 12
Reverse Drive 13
Fill Solution Tank 14
Scrubbing 15
Drying 16
Drain Recovery Tank 17
Flushing Recovery Tank 18

OPTIONS
Vac Wand 19
Onboard Charger 20
Brush Pressure +/- 21
Vac Clog Light 22

DAILY MAINTENANCE
Clean Cylindrical Hopper 23
Charge Batteries 24

WEEKLY MAINTENANCE (<25 HRS)
Clean White Filter/Screen 25
Rotate Disk Brushes 26
Rotate Cylindrical Brush 27
Replace Orbital Pads 28
Clean Solution Filter 29
Squeegee Blade Replacement 30
Drain Solution Tank 31

MONTHLY MAINTENANCE (<100 HRS)
Deck Shroud Curtain Replacement . . 32
Cylindrical Side Wiper Replacement . 33
Deck Leveling 34

OTHER
Common Wear Parts 35
Squeegee Blade Kits 37
PM Sheet 38
Battery Chargers 40
Schematics 41
Schematics Adjusted Down Pressure . 42
Decals 43

Questions? Call 877-401-0730 Use OEM Parts

Important Safety Messages

You will see four kinds of safety reminders in this manual:

⚠ DANGER DANGER indicates a hazardous situation which, if not avoided, will result in death or serious injury.	**⚠ WARNING** WARNING indicates a potentially hazardous situation which, if not avoided, could result in death or serious injury.
⚠ CAUTION CAUTION indicates a potentially hazardous situation which, if not avoided, could result in minor or moderate injury or damage to this machine or nearby objects. CAUTION also can be used to alert against unsafe practices.	**NOTICE** NOTICE indicates information considered important, but not hazard-related. This safety message may be related to property damage or warranty warnings.

Your safety, and that of others, is very important. Operating this machine safely is an important responsibility.

DO NOT OPERATE THIS MACHINE:

- Unless you are trained and authorized to do so by your RPS Authorized Local Distributor
- Unless you have read and understood this Operator's Manual
- On surfaces with greater than a 3° grade.
- Within 25' (8m) of Loading Docks

WHEN OPERATING THIS MACHINE:

- Remove loose objects from the floor that could be projected from the rotating Brushes
- Keep your hands and feet away from the rotating Brushes
- Do not operate this machine where flammable liquids, vapors, or dust are present
- Use caution when maneuvering

BEFORE LEAVING THE MACHINE:

- Drain "clean" Solution & "dirty" Recovery solution into APPROVED drains
- Park the machine on a level surface
- Turn the machine off & remove key

BEFORE SERVICING THE MACHINE:

- Disconnect the Batteries

⚠ DANGER Explosive hydrogen gas forms when Batteries are charging. An open flame or spark can cause this gas to explode. Serious personal injury or property damage could occur. Only charge the Batteries in this machine in a well ventilated area.	**⚠ DANGER** Flammable materials can cause an explosion or fire. Do not use flammable materials in Tank or pick up.

⚠WARNING

The Batteries in this machine produce hazardous voltage which can cause electrical shock, burns and/ or electrocution. Always disconnect Batteries before servicing this machine.

⚠WARNING

When climbing or descending ramps, always drive machine forward. To avoid overturning the machine, Do not back down ramps. Do not drive across inclines. Do not turn while ascending or descending ramps. Overturning the machine can cause serious injury or death.

⚠WARNING

Do not use water that exceeds 135°F / 57°C. If water is above said temperature, this will void the Tank Warranty.

⚠WARNING

Do not park this machine on ramps or slopes. Always park this machine on a level, hard surface. Do not operate this machine outdoors or on uneven surfaces.

⚠WARNING

The Batteries in this machine contain sulfuric acid, which causes burns to skin. If battery acid contacts clothing or skin, rinse the effected area with cold water immediately. If battery acid gets on your face or in your eyes, flush the area immediately with cold water and seek medical attention.

⚠WARNING

To avoid electrical shock, do not operate this machine over electrical floor outlets.

⚠CAUTION

To avoid damage to this machine, use only cleaning solutions and replacement parts recommended by the manufacturer.

⚠CAUTION

Do not operate this machine if any parts have been damaged or removed.

⚠WARNING

Dress safely. Do not wear rings or metal wrist watches when servicing this machine, as they can cause an electrical short circuit which can cause serious burns.

⚠WARNING

Do not remove, paint over or destroy warning decals. If warning decals become damaged, call 1-262-681-3583 for free replacements.

⚠WARNING

Dress safely. Do not wear a neck tie, scarf, or any loose or dangling clothing while operating this machine. Loose or dangling clothing or neck-wear can tangle in rotating parts, causing serious injury or death.

⚠WARNING

Always turn off this machine before leaving it unattended. Do not allow untrained persons to operate this machine.

⚠WARNING

NO RIDERS. Do not carry passengers on this machine. Do not use this machine as a stepladder or work platform.

⚠WARNING

Understand the dynamic braking system before you operate the machine on ramps. Machine may coast.

⚠WARNING

Before you service a Battery, always wear face protection, protective gloves and protective clothing. Battery acid or battery explosion can cause serious injuries.

⚠CAUTION

Always use the automatic battery charger provided by the manufacturer of this machine to charge the Batteries of this machine. It is designed to charge the Batteries at the appropriate rate. If you must use a different charger, disconnect the Batteries before charging to avoid damage to the electronic speed controller.

⚠CAUTION

To avoid damage to the electronic control components of this machine, Do not store this machine outdoors. Do not pressure wash this machine.

Machine Overview

1. Recovery Tank
2. Vac Motor
3. 3x 12VDC Batteries
4. Solution Tank
5. Squeegee
6. Rear Caster Wheel
7. Tire
8. Scrub Deck
9. Recovery Tank Clean Out
10. Foam Float Ball & White Filter
11. Solution Fill
12. Tank Latch
13. Charging Port
14. Recovery Drain Hose
15. Solution Sight Tube & Drain Hose
16. Squeegee Lever

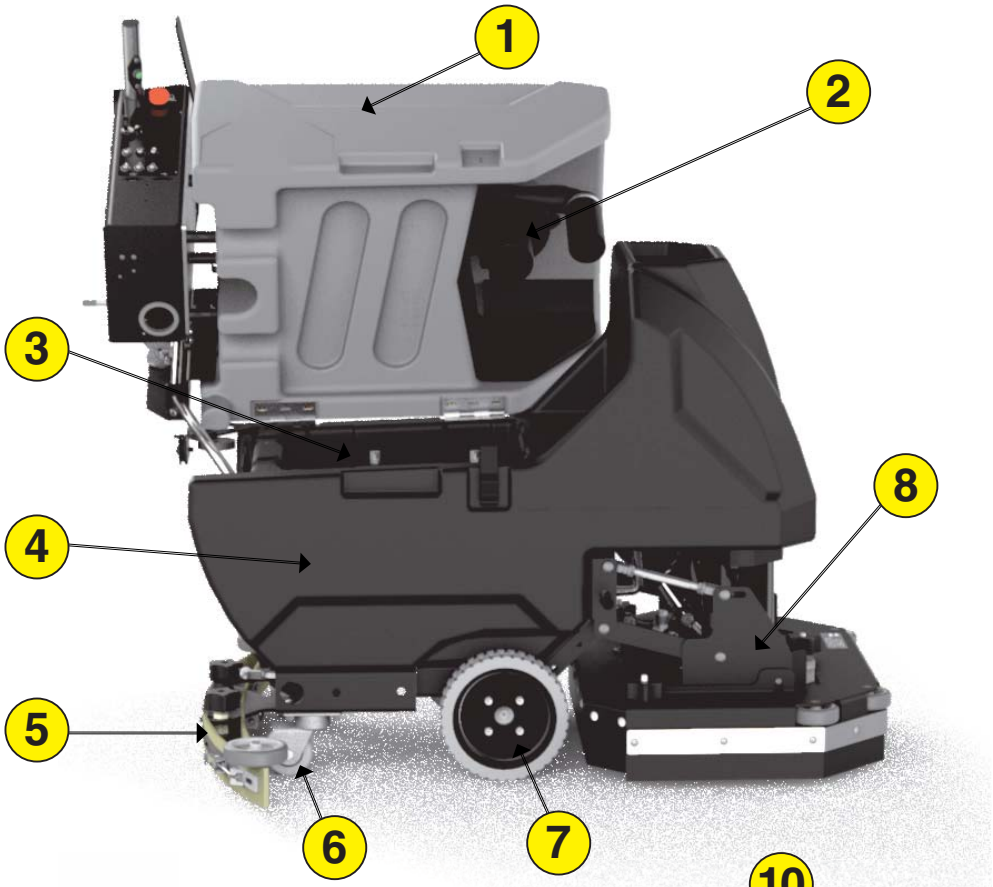

Central Command Overview

1. Drive Switch
2. Key Switch
3. Right Brush Circuit Breaker
4. Left Brush Circuit Breaker
5. Positive BUSS Circuit Breaker
6. Pump Circuit Breaker
7. USB Port (Optional)
8. USB Port (Optional)
9. Negative BUSS Circuit Breaker
10. Vac Circuit Breaker
11. Speed Control Knob
12. Battery Guage/Hour Meter
13. Vac Clog Indicator Light (Optional)
14. Solution Indicator Light
15. E-Stop
16. Brush Pressure Gauge
17. Vac Switch I/O
18. Solution Switch I/O
19. Deck Switch Up (I) / Down (O)
20. Down Pressure Toggle Switch (Optional)
21. Drive Switch
22. Reverse Switch

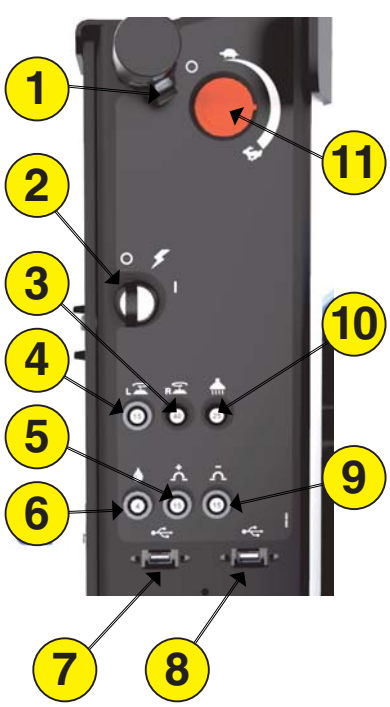

Questions? Call 877-401-0730 Use OEM Parts

Squeegee Installation

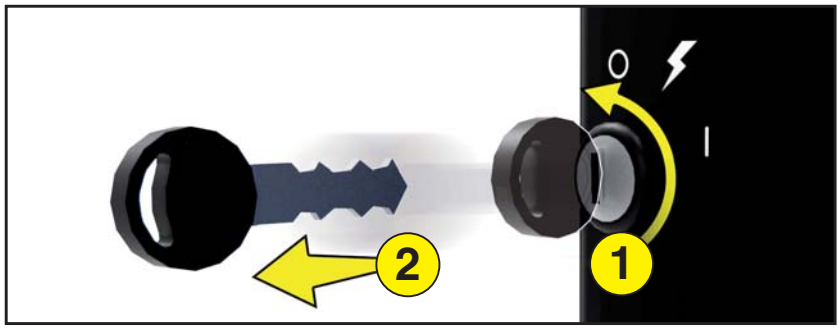

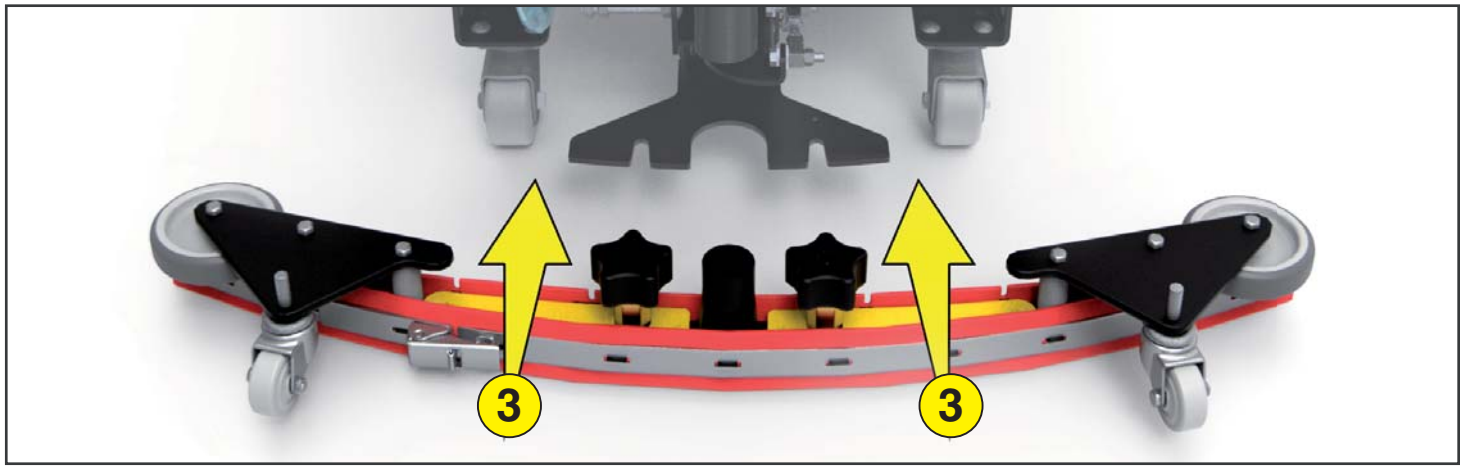

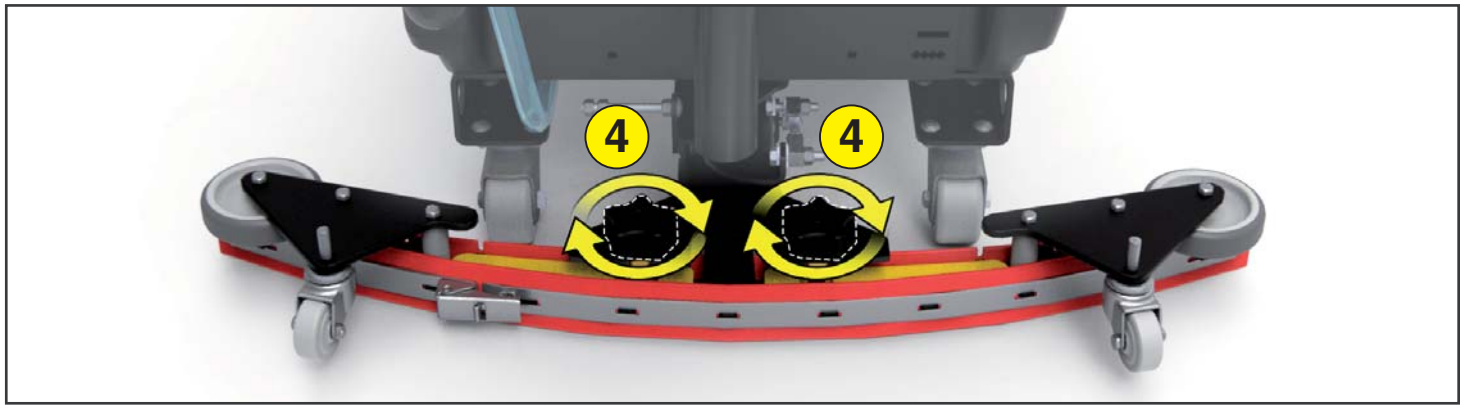

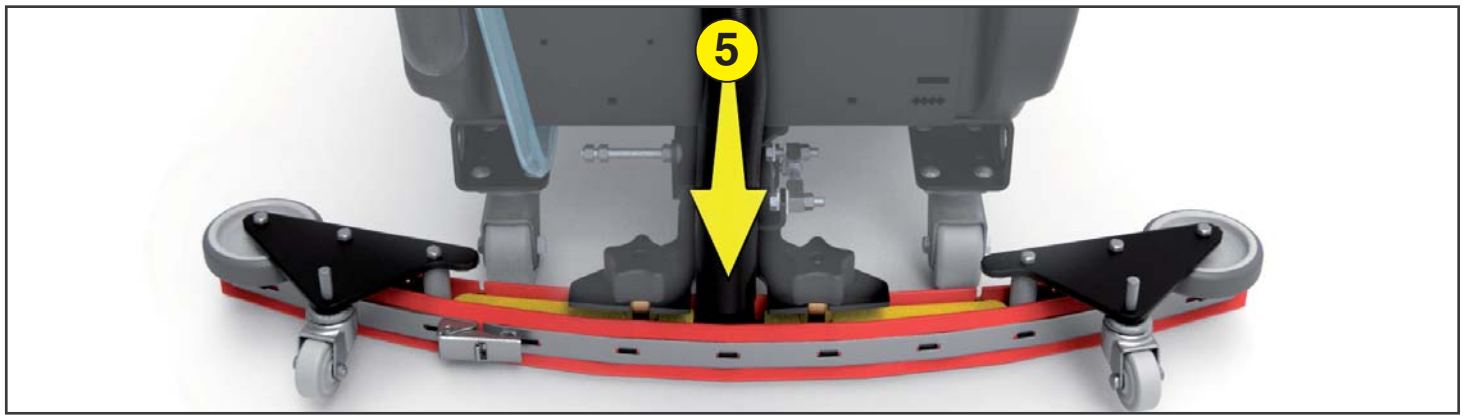

Questions? Call 877-401-0730 Use OEM Parts

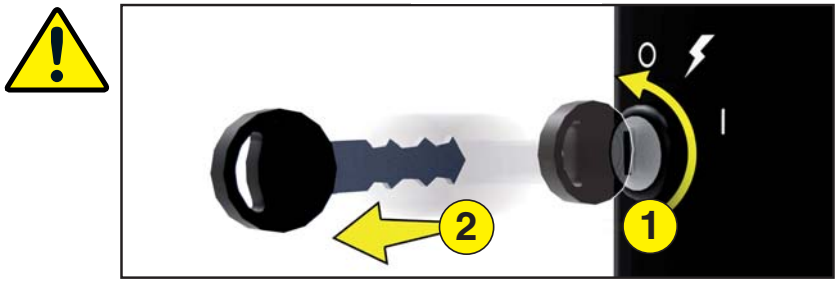
2
1

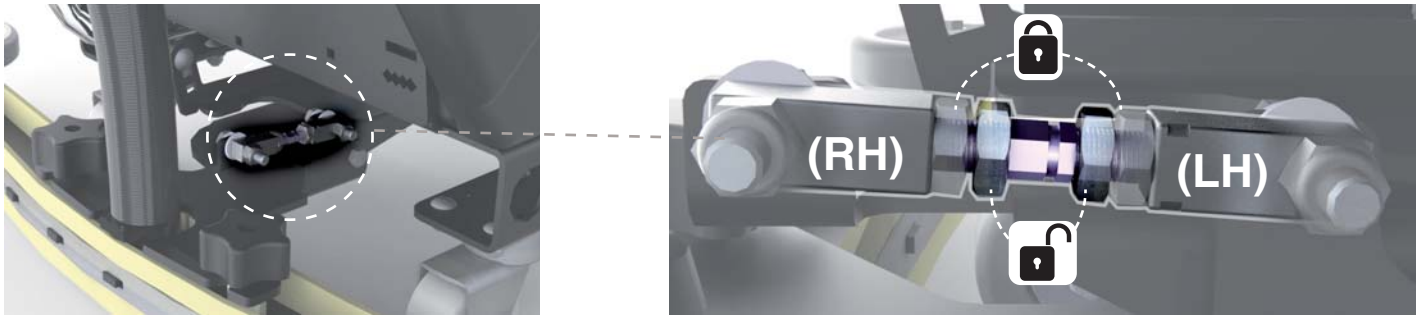
(RH)
(LH)

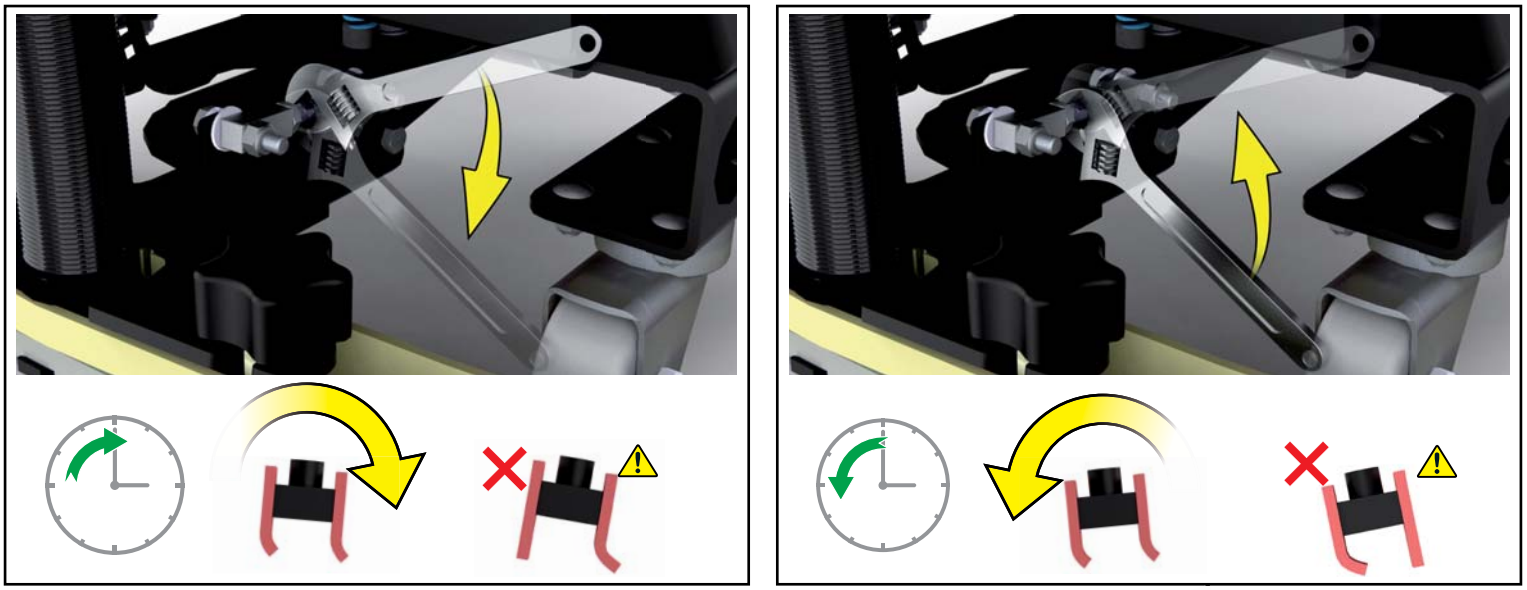

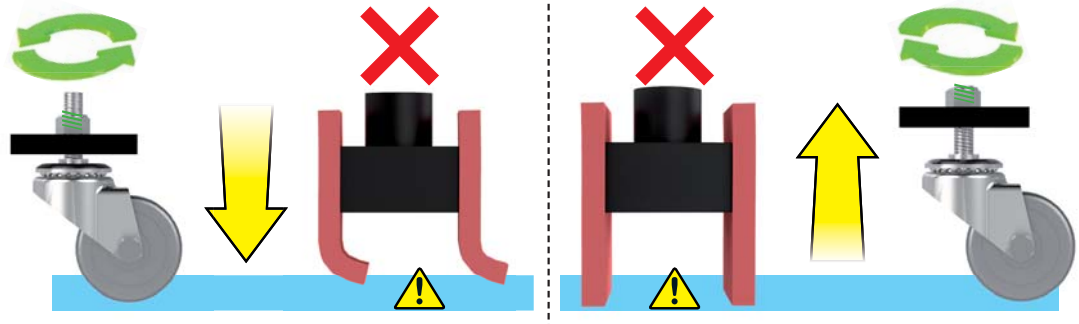

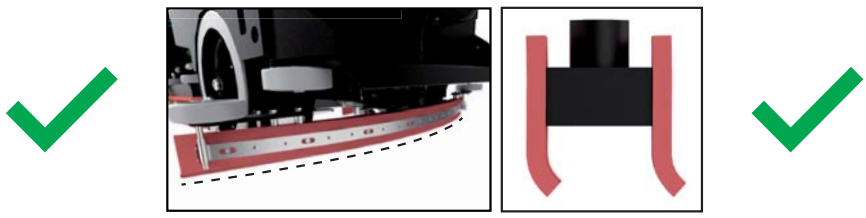

Battery Setup

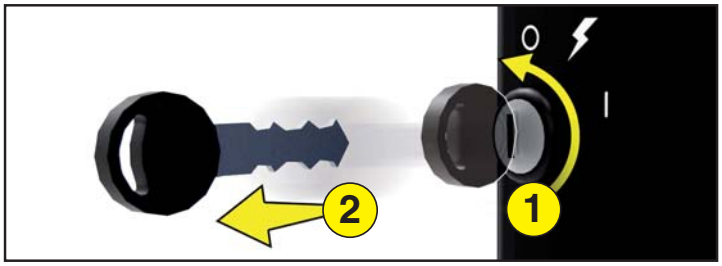

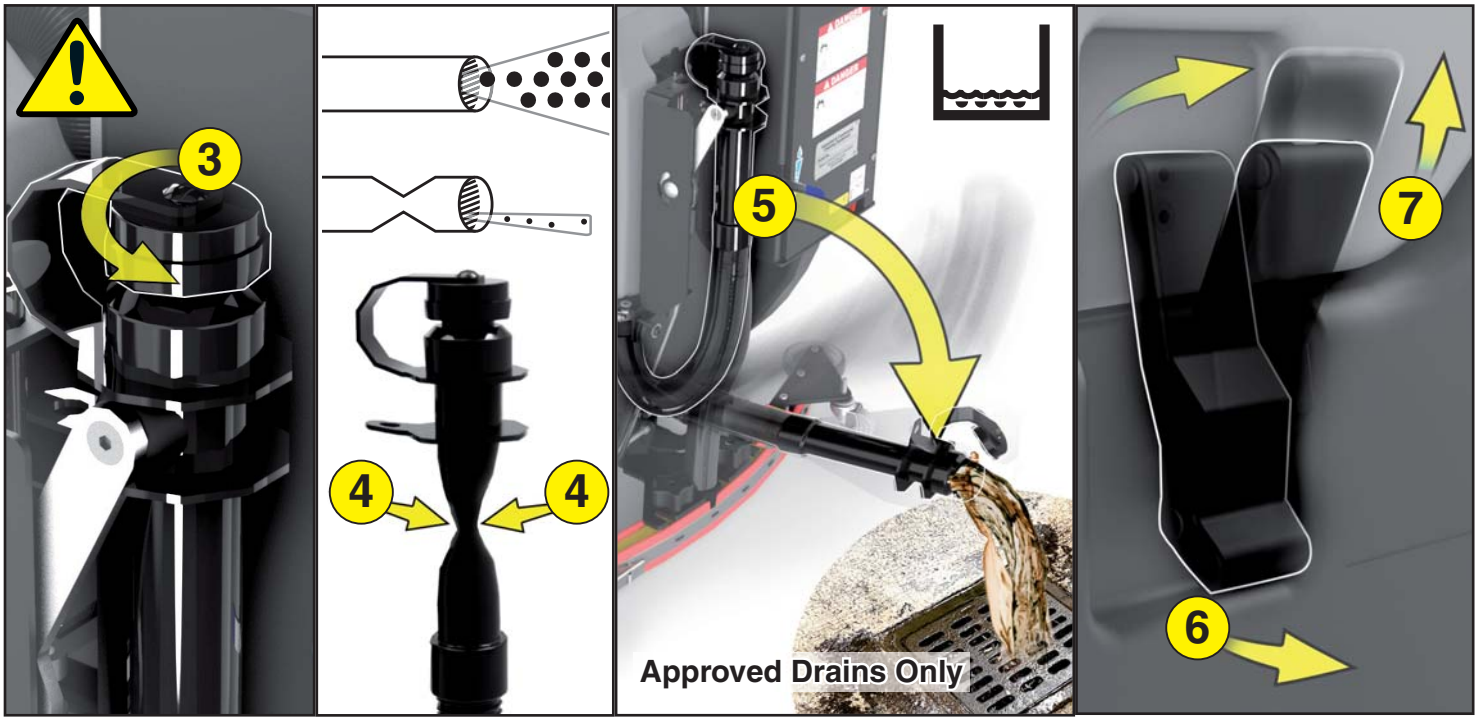

Machine On Level Ground

Questions? Call 877-401-0730 Use OEM Parts

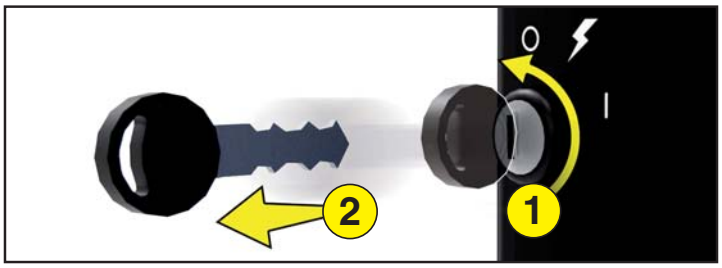
O
I
1
2

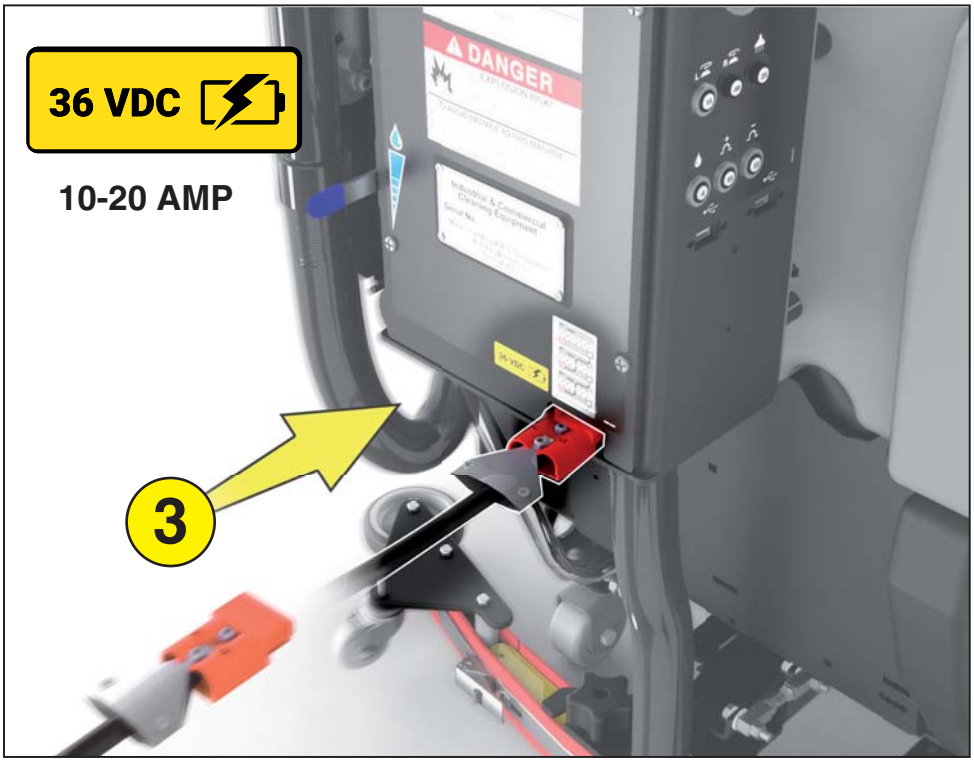
36 VDC
10-20 AMP
DANGER
3

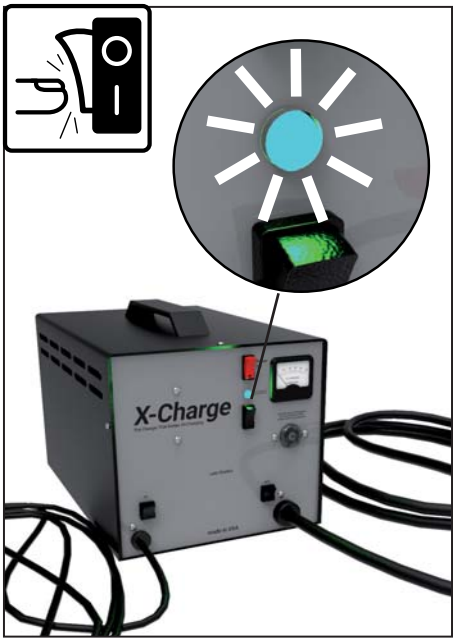
X-Charge

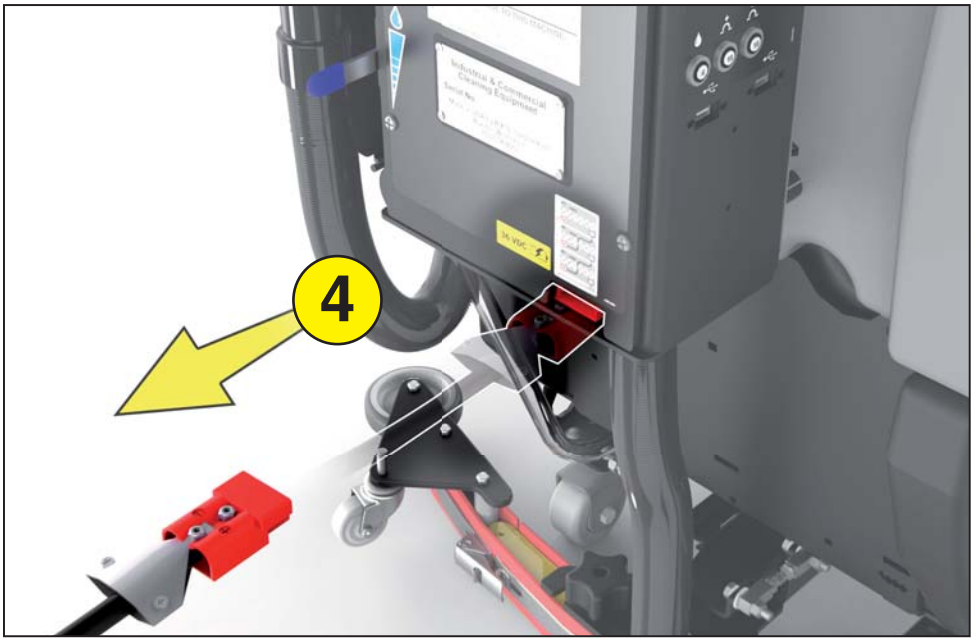
4

X-Charge

Forward Drive

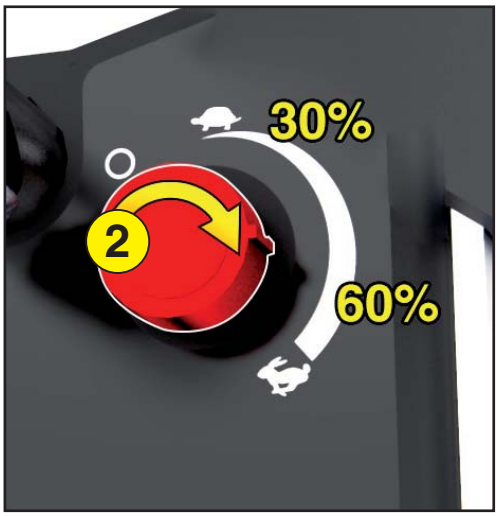

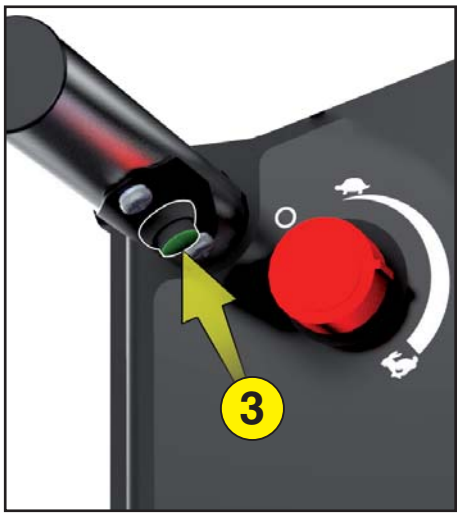

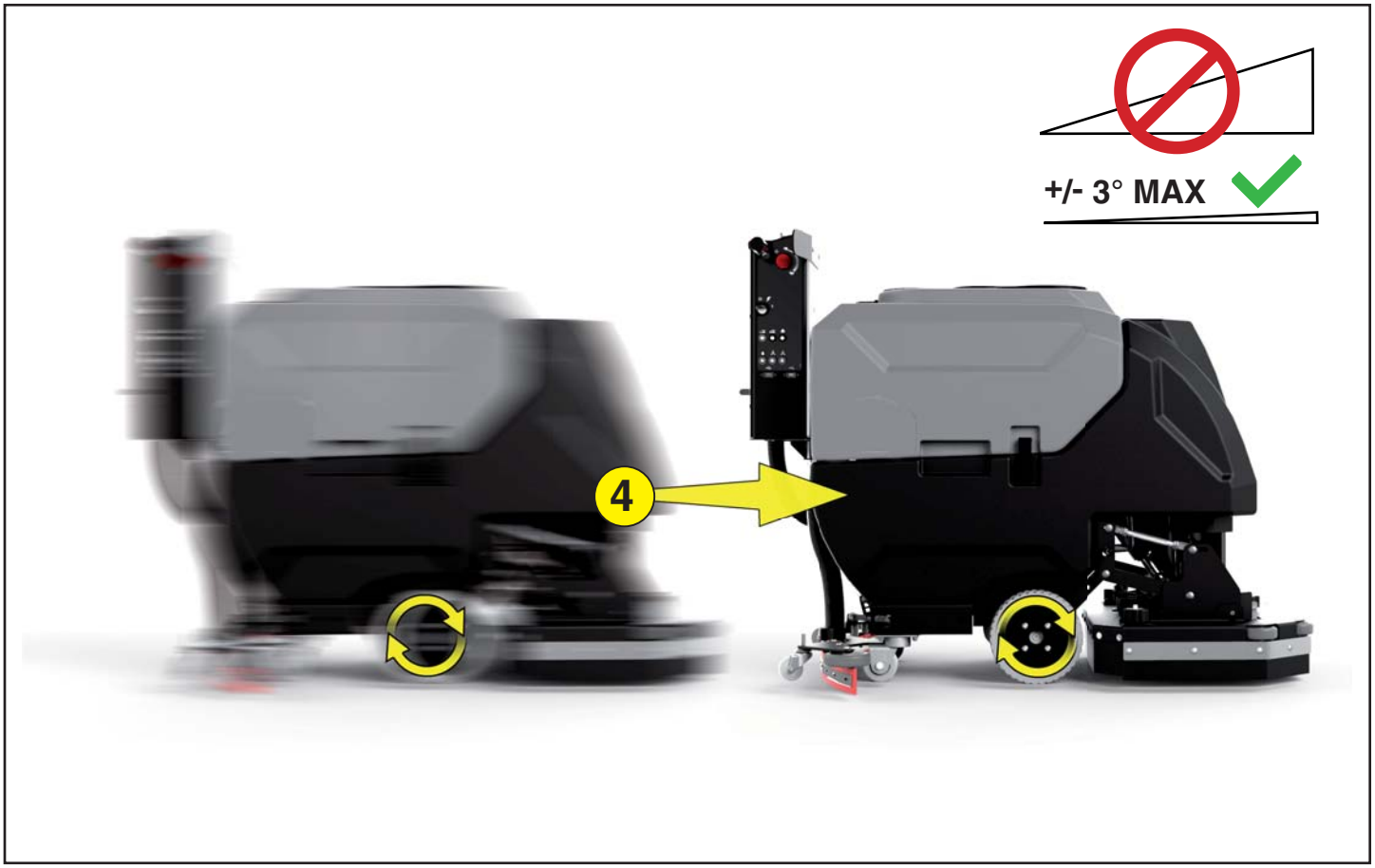

Questions? Call 877-401-0730 Use OEM Parts

1

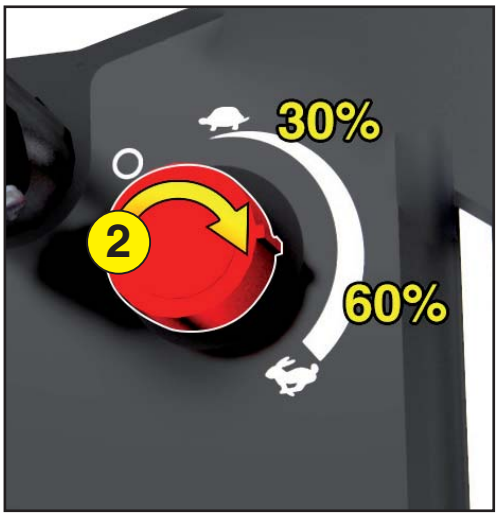
30%
2
60%

3

+/- 3° MAX
4

Fill Solution Tank

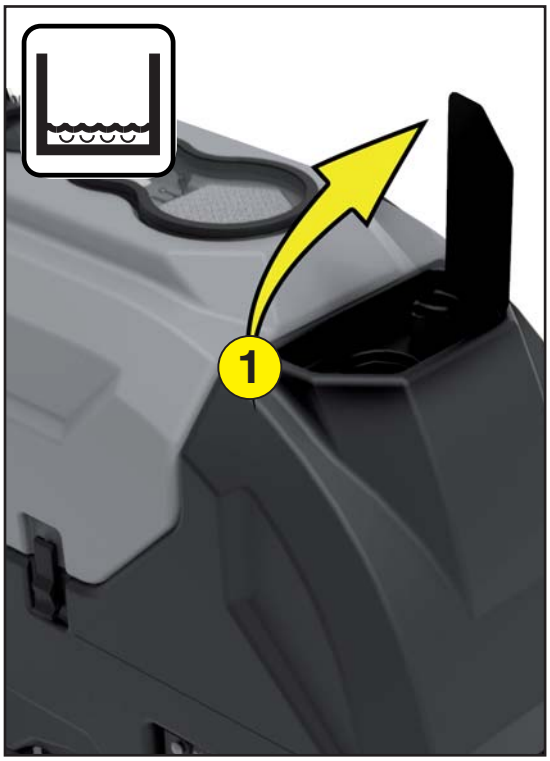

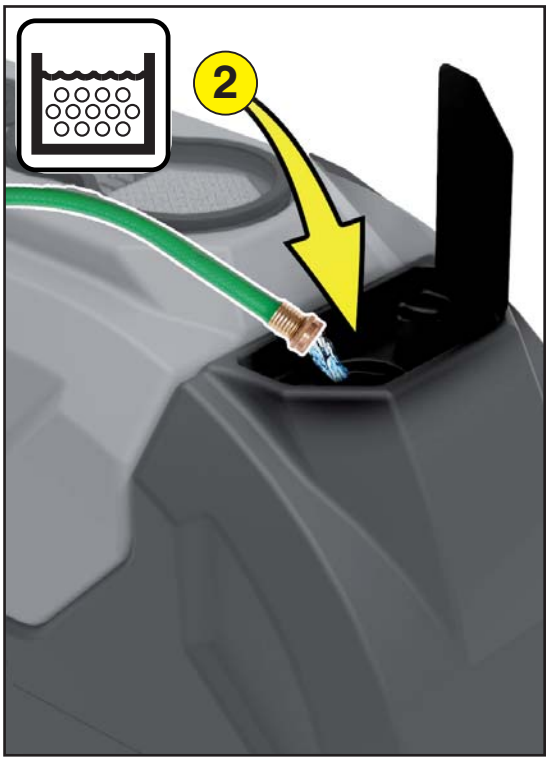

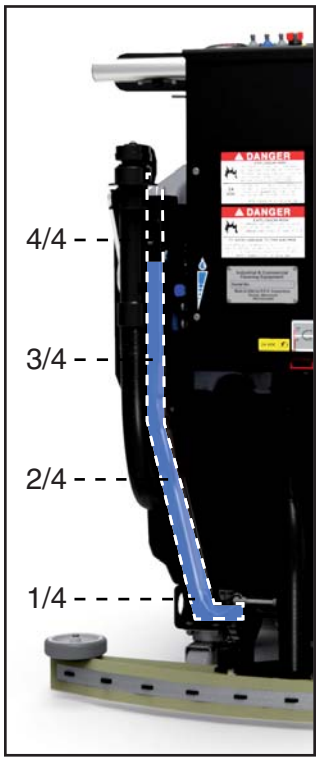

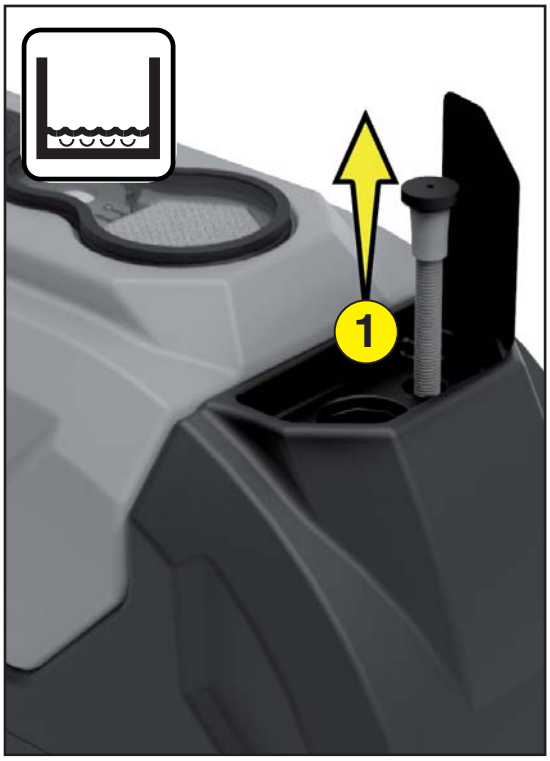

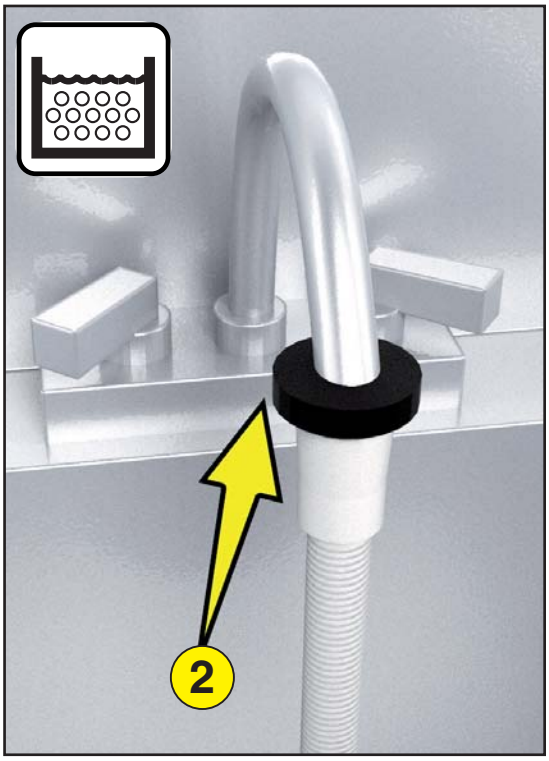

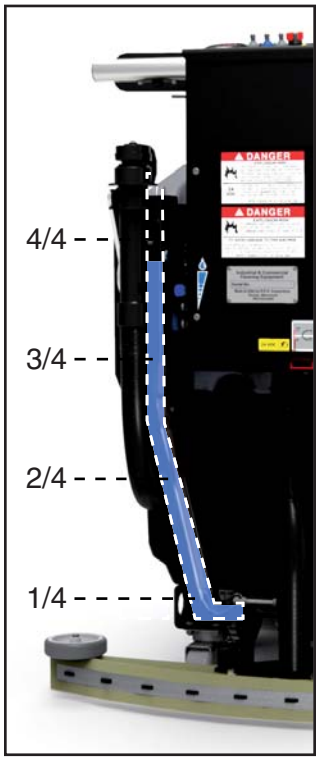

Questions? Call 877-401-0730 Use OEM Parts

1

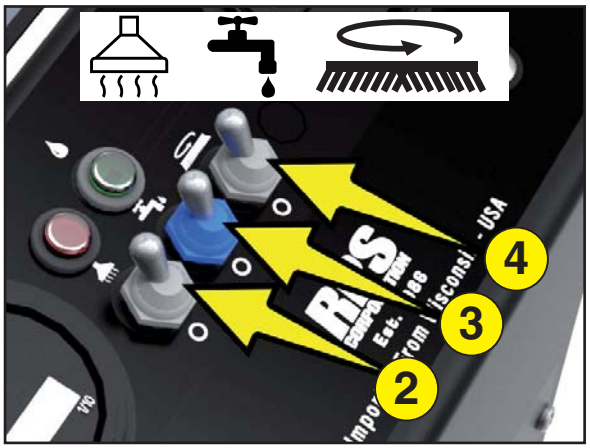
2
3
4

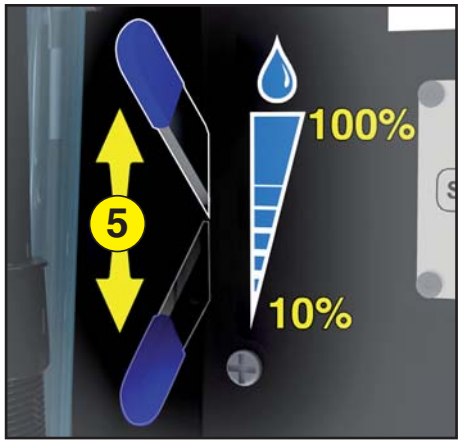
5
100%
10%

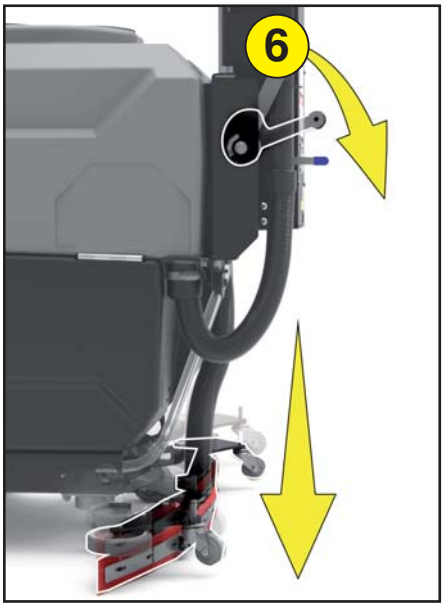
6

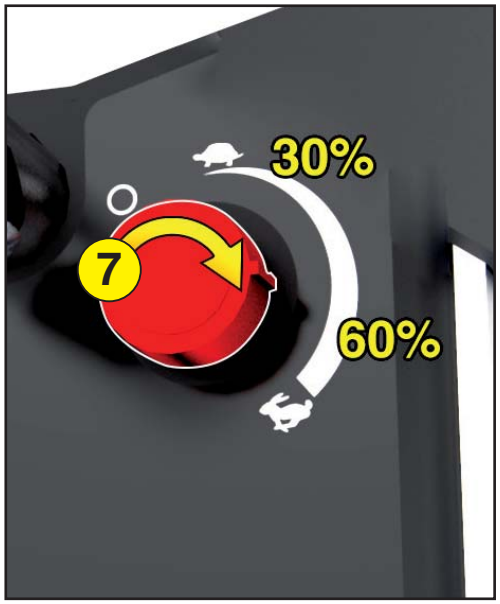
7
30%
60%

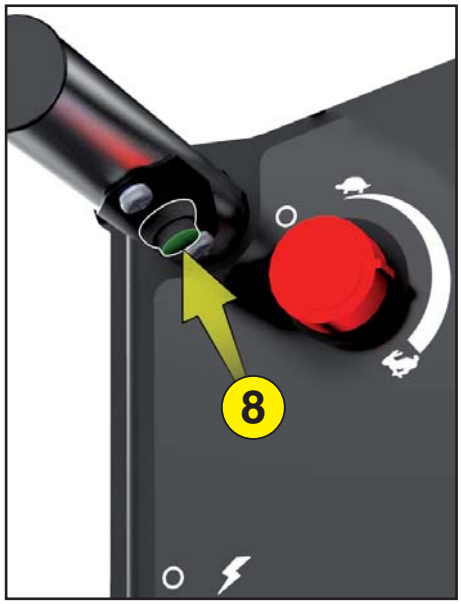
8

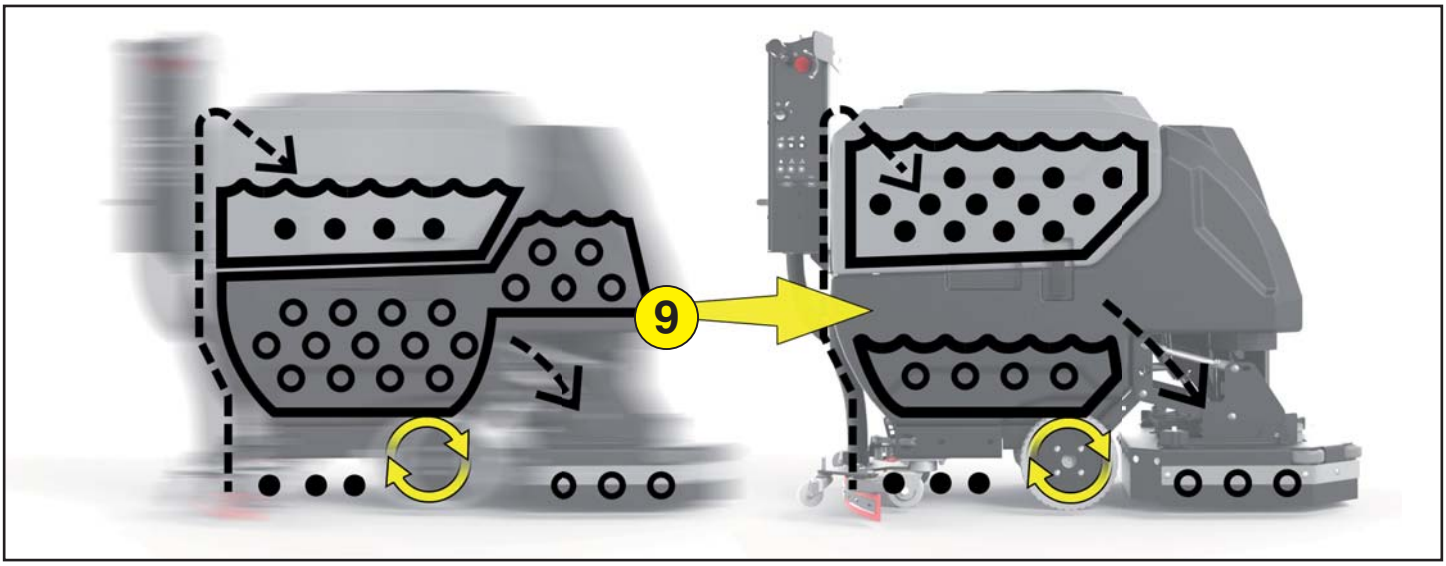
9

Drying

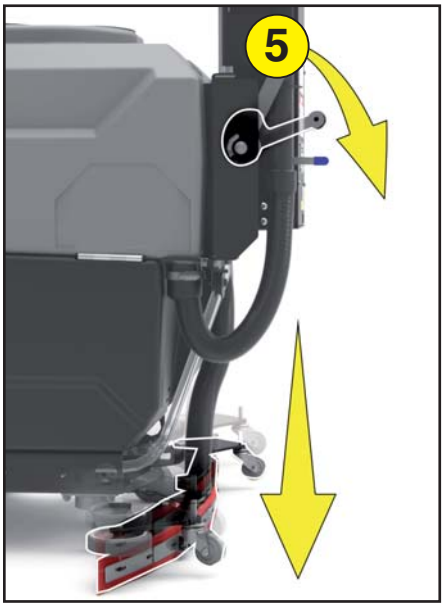

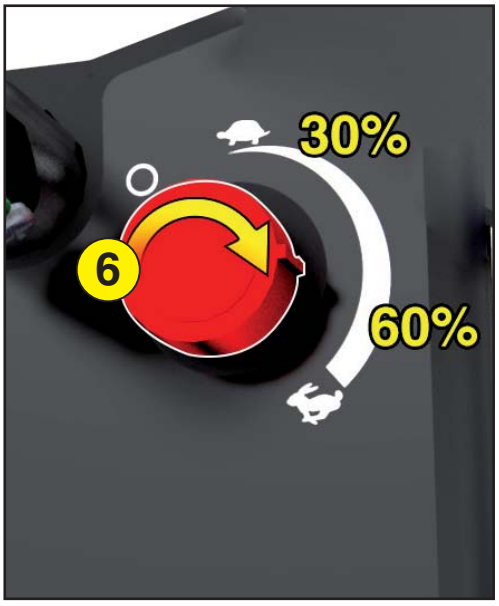

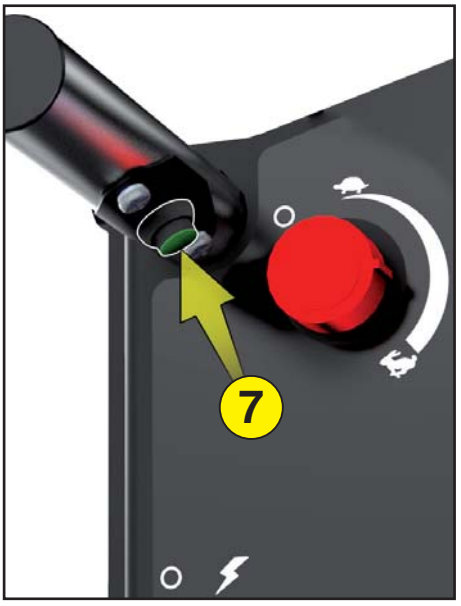

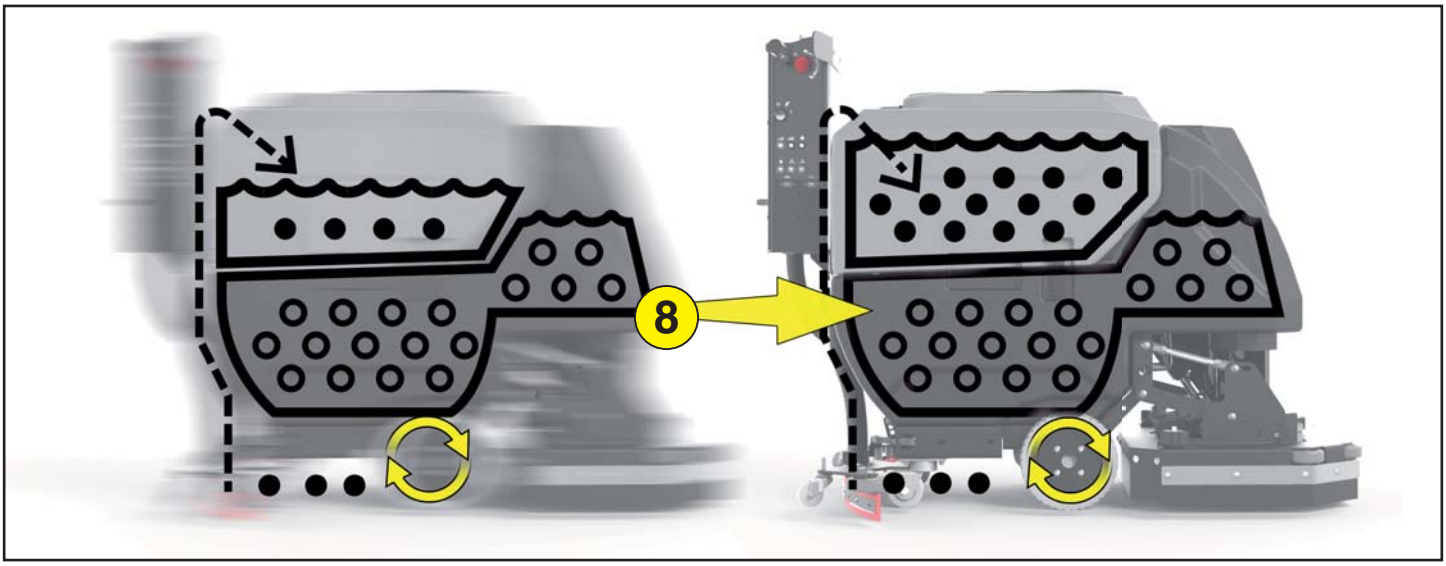

Questions? Call 877-401-0730 Use OEM Parts

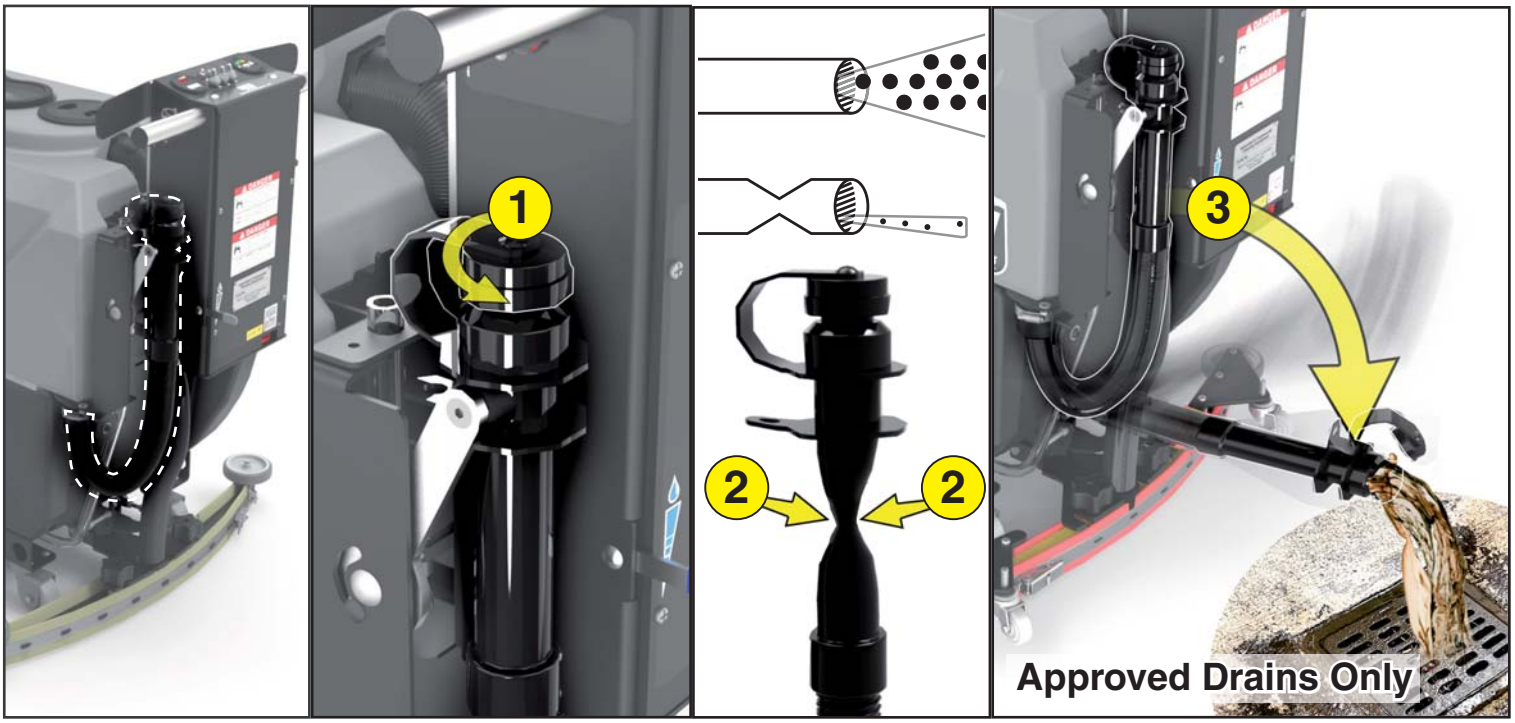
1
2
2
3
Approved Drains Only

Flushing Recovery Tank

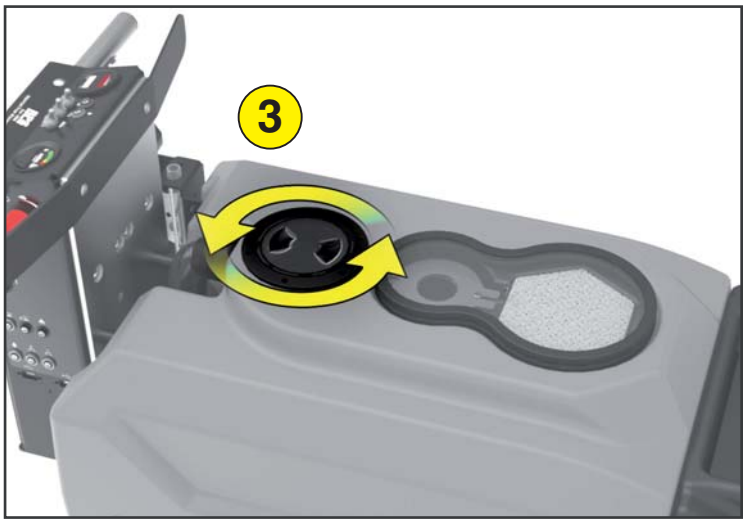

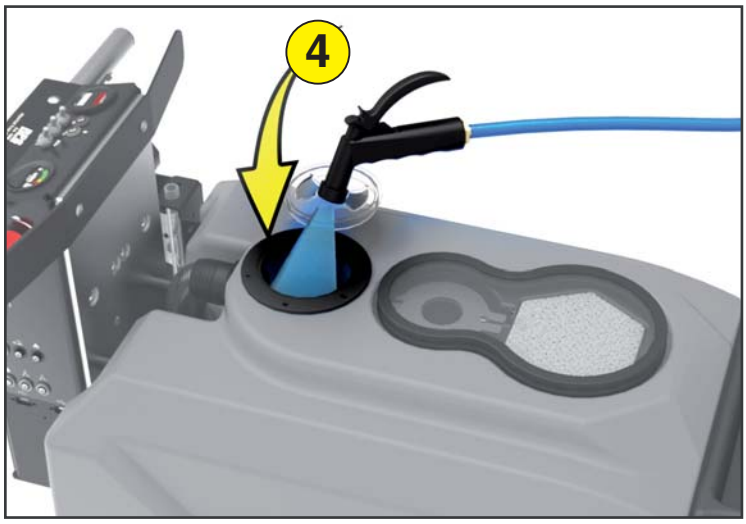

Vac Wand

Questions? Call 877-401-0730 Use OEM Parts

OPTIONS

Onboard Charger

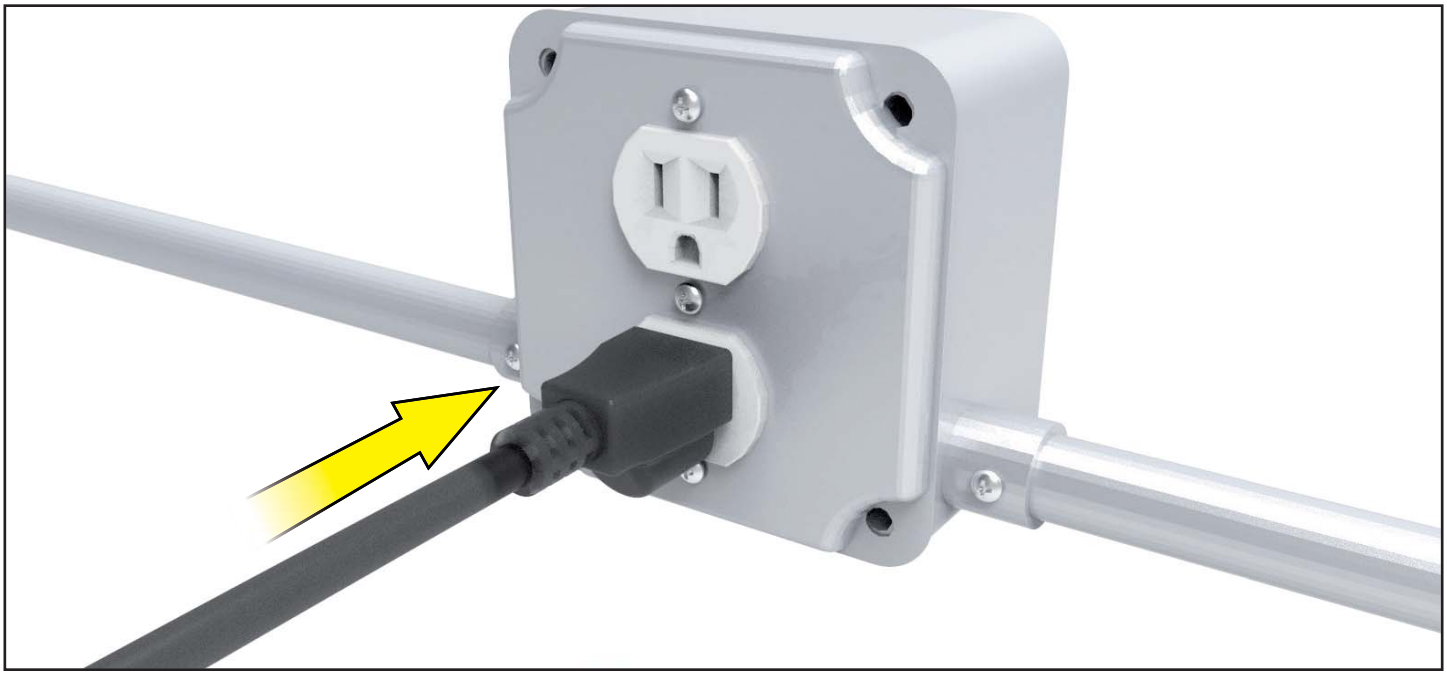

STOP
190-4852
RPS
CORPORATION
Est. 1986
Imported From Wisconsin - USA

190-4852
RPS
CORPORATION
Est. 1986
Imported From Wisconsin - USA

Vac Clog Light

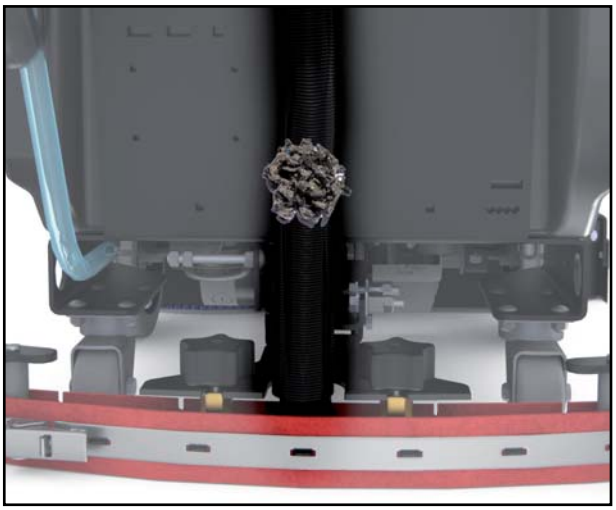

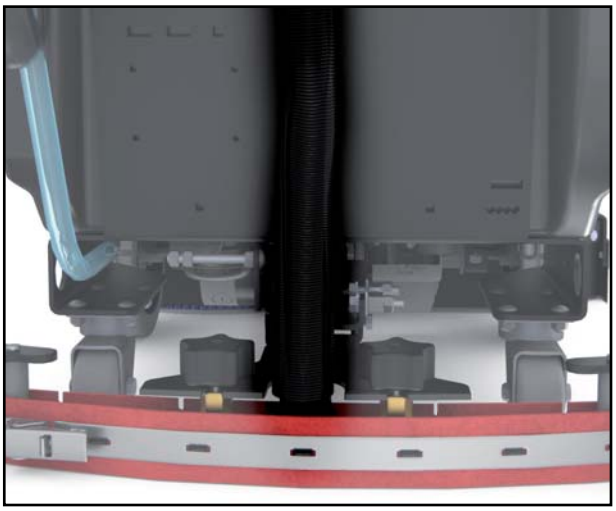

Clean Cylindrical Hopper

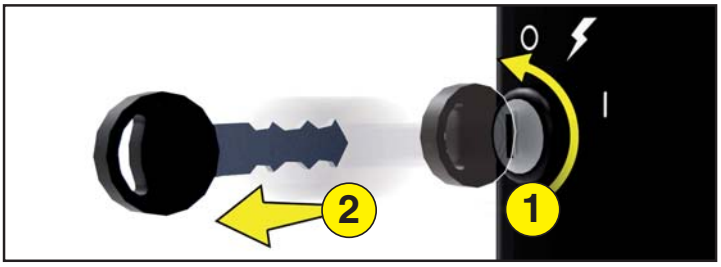

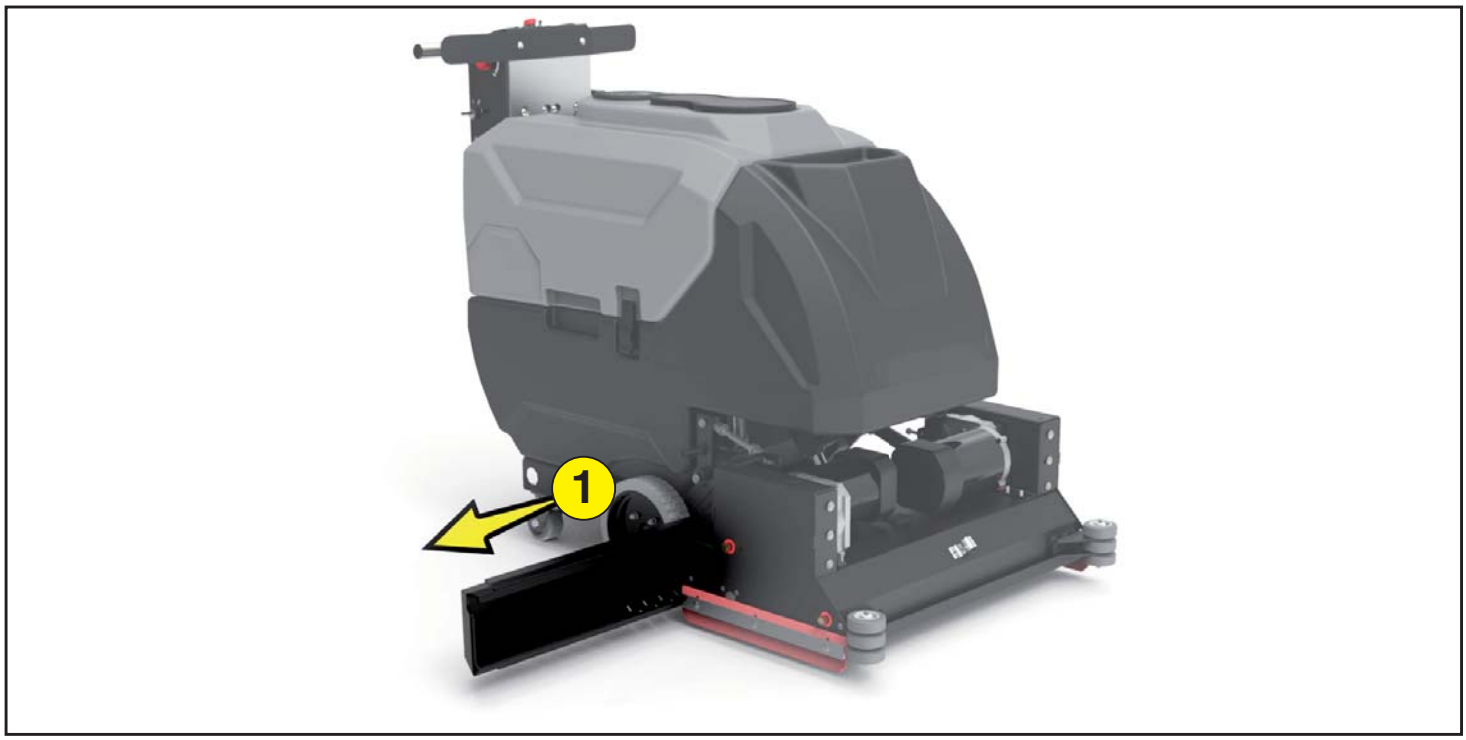

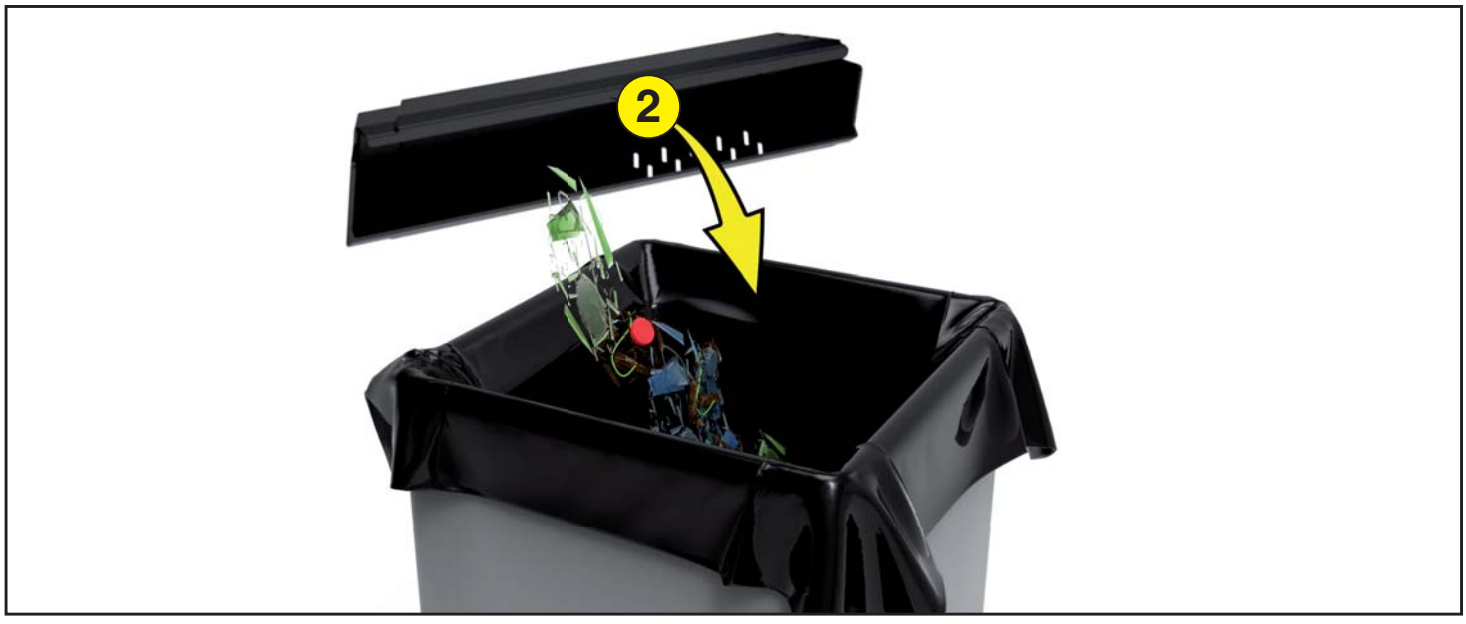

Questions? Call 877-401-0730 Use OEM Parts

Charge Batteries

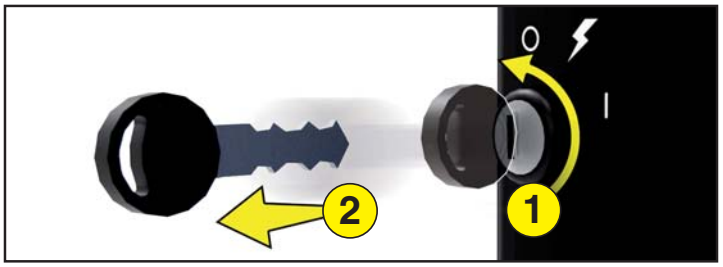

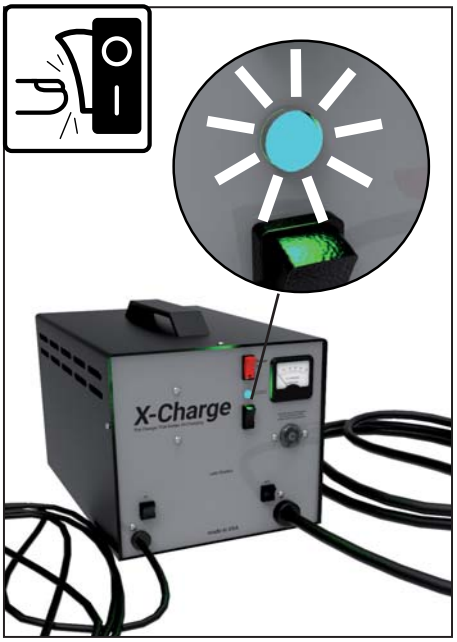

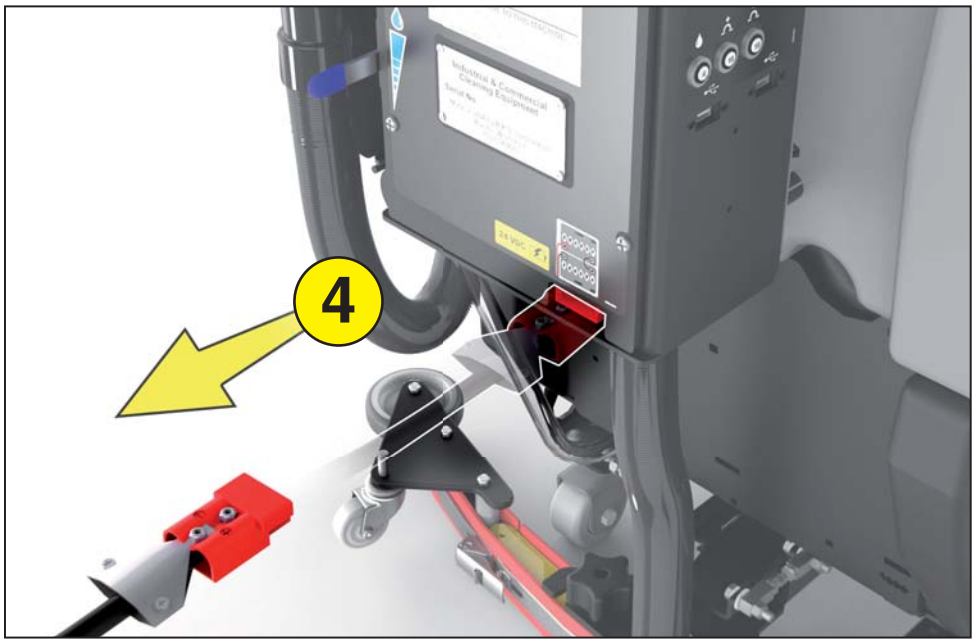

Clean White Filter/Screen

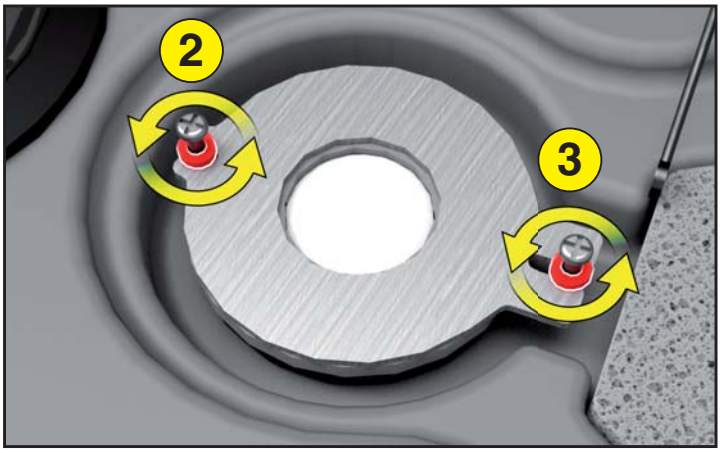

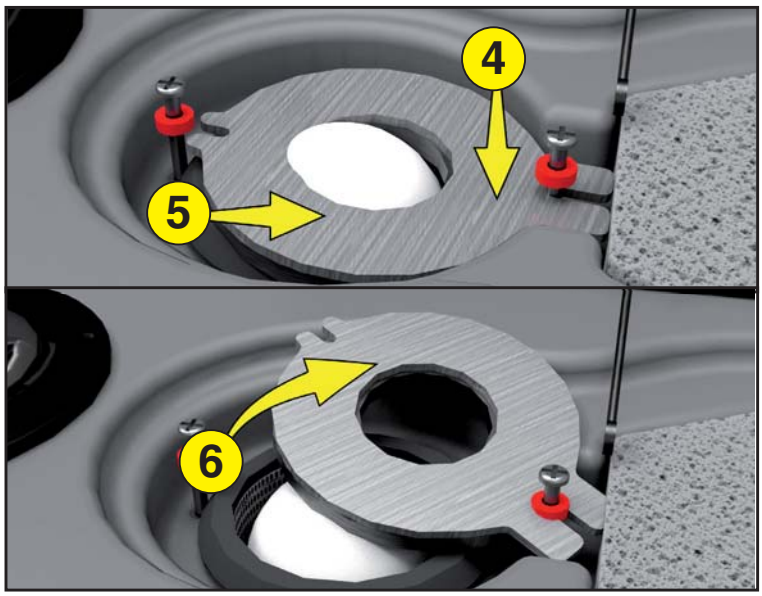

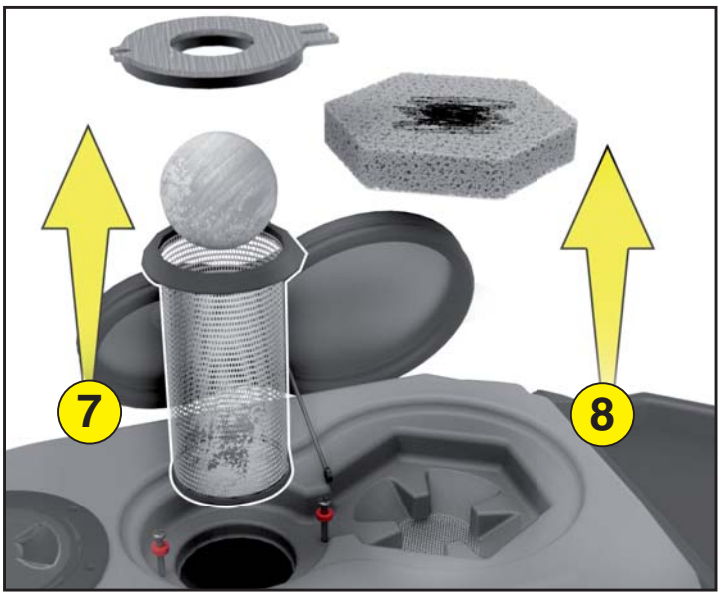

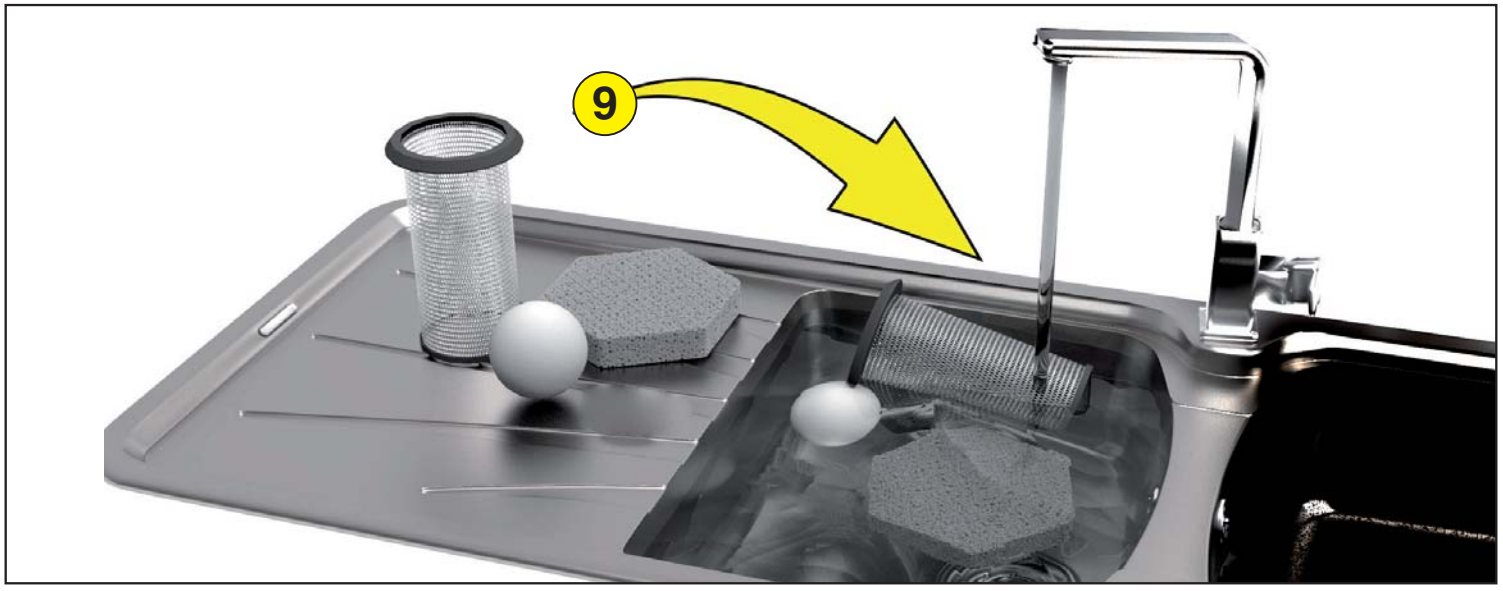

Questions? Call 877-401-0730 Use OEM Parts

WEEKLY MAINTENANCE (<25 HRS)

Rotate Disk Brushes

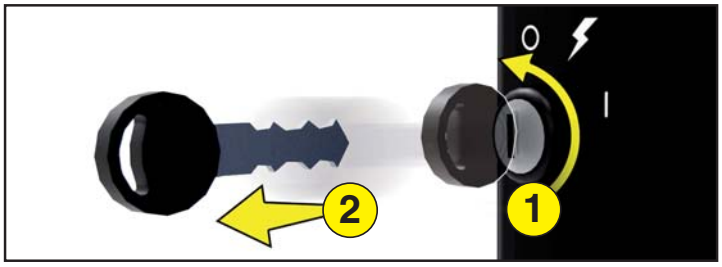

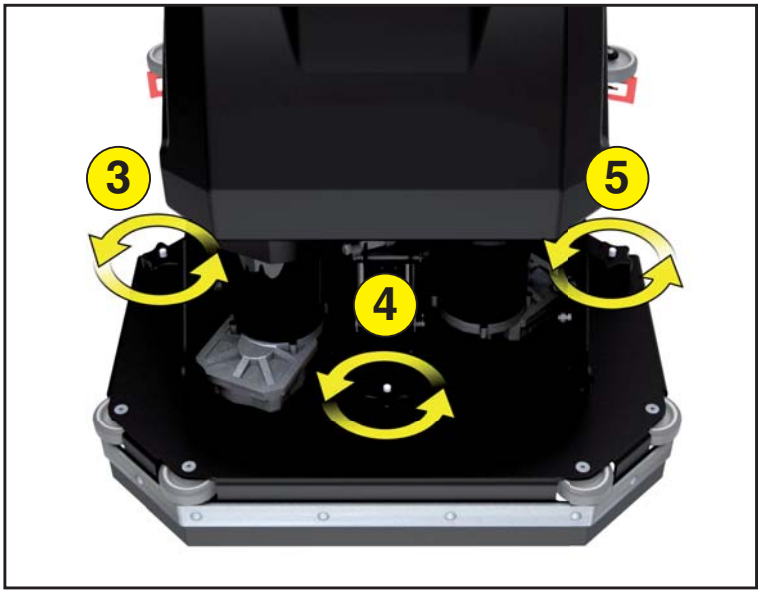

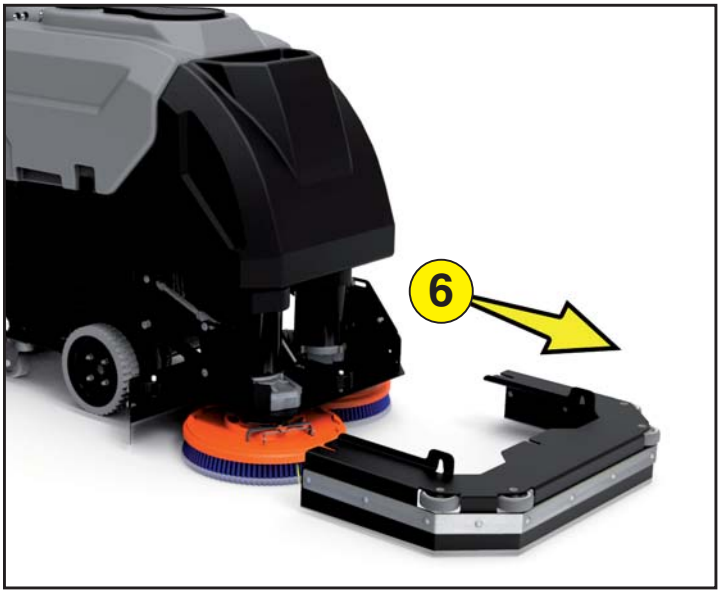

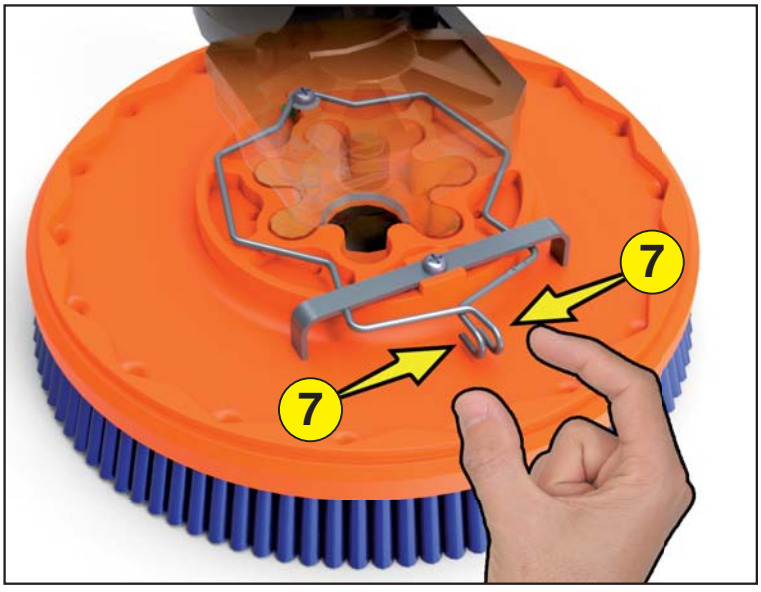

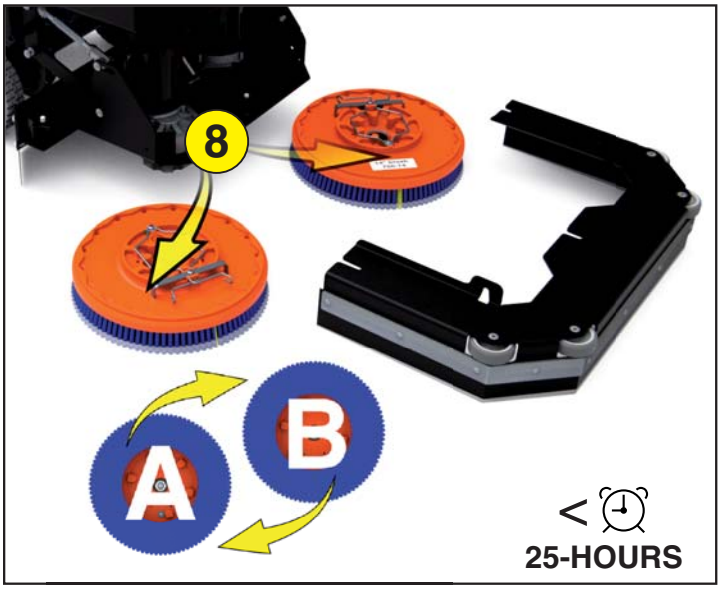

Rotate Cylindrical Brush

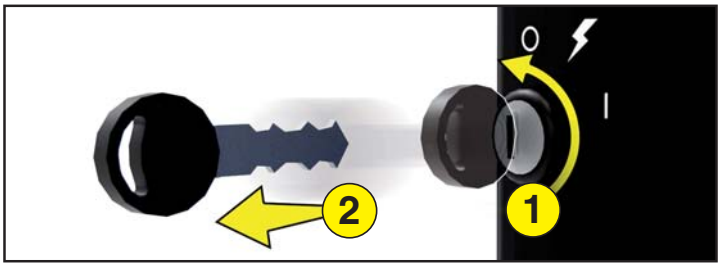

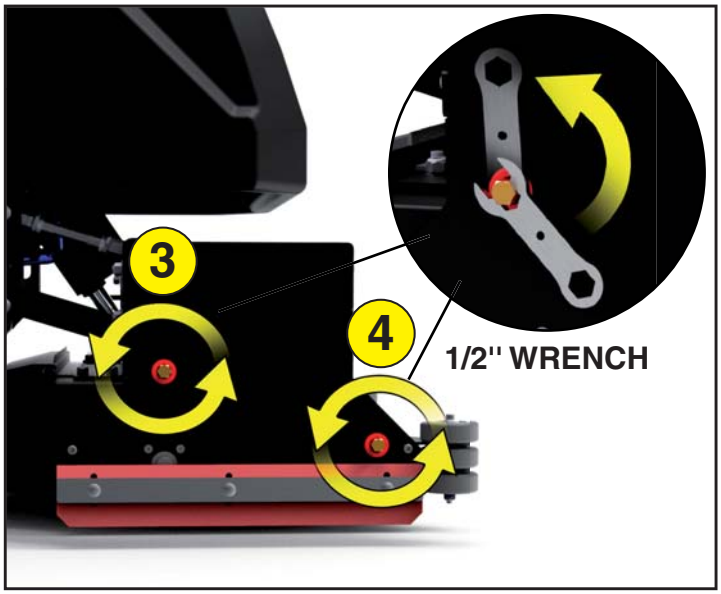

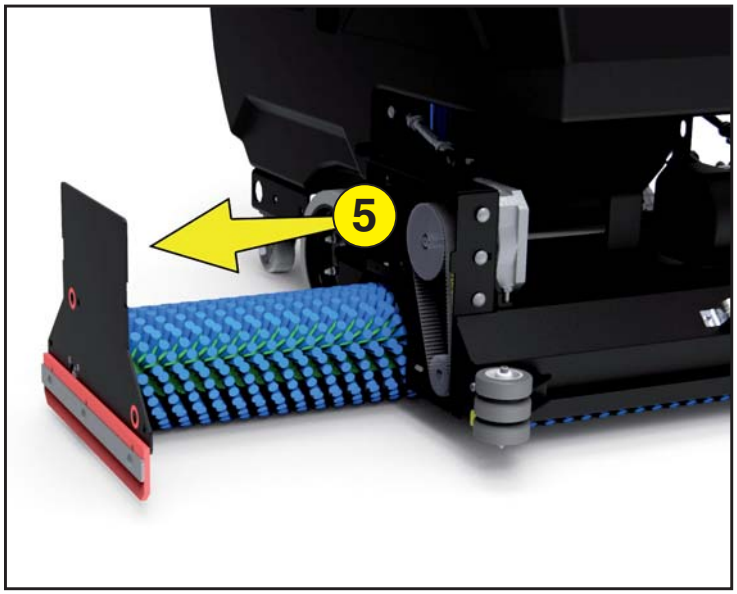

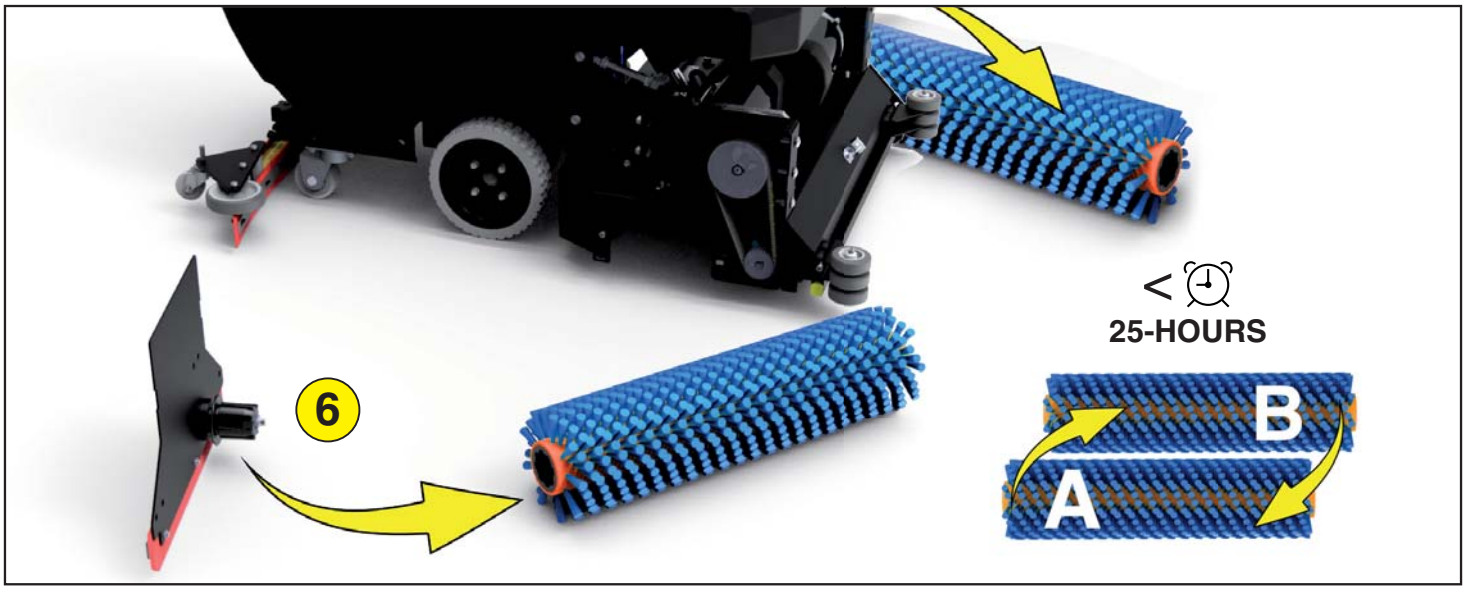

Questions? Call 877-401-0730 Use OEM Parts

Replace Orbital Pads

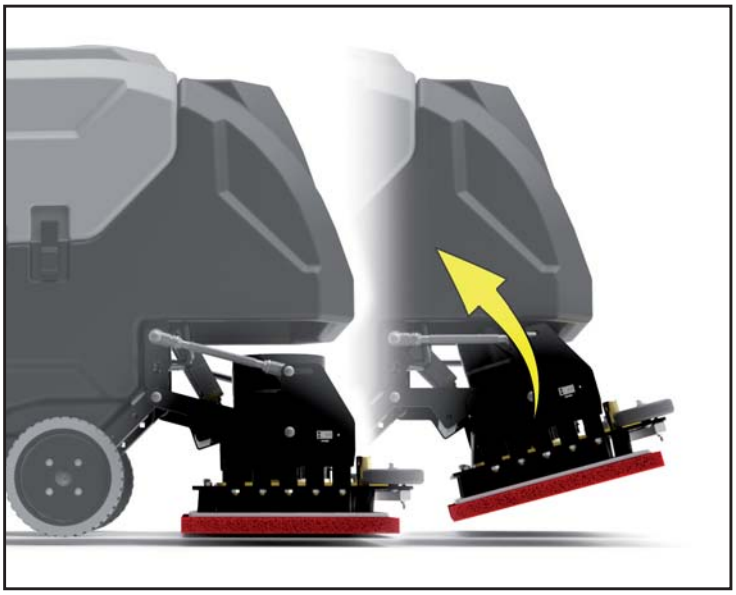

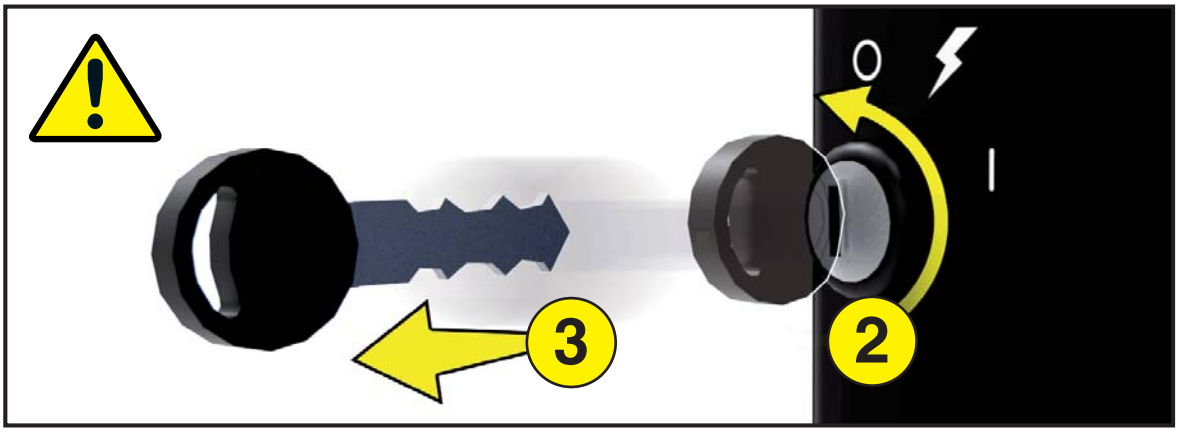

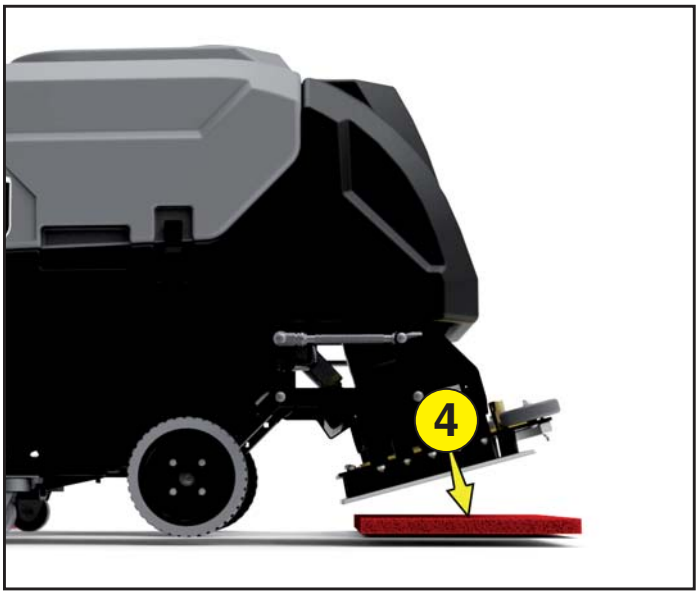

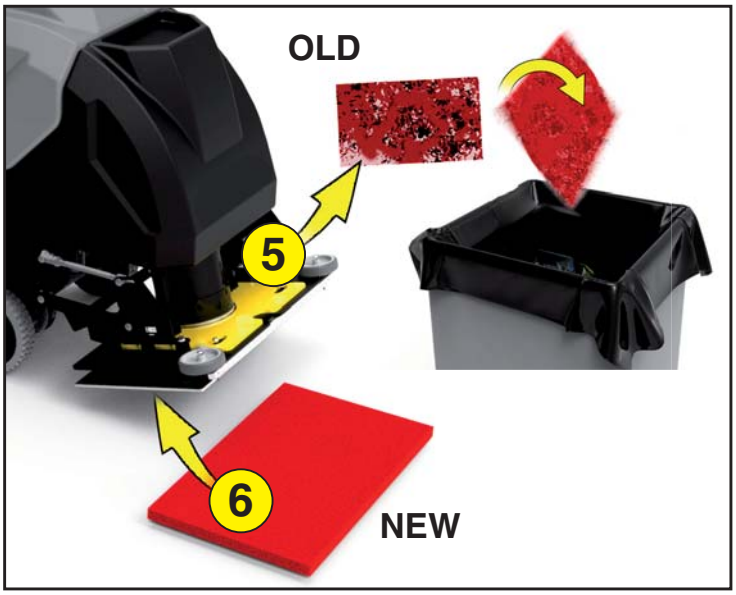

Clean Solution Filter

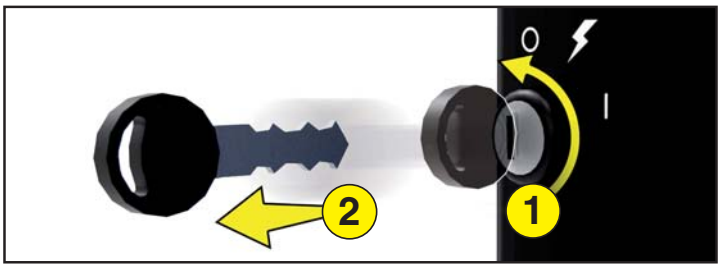

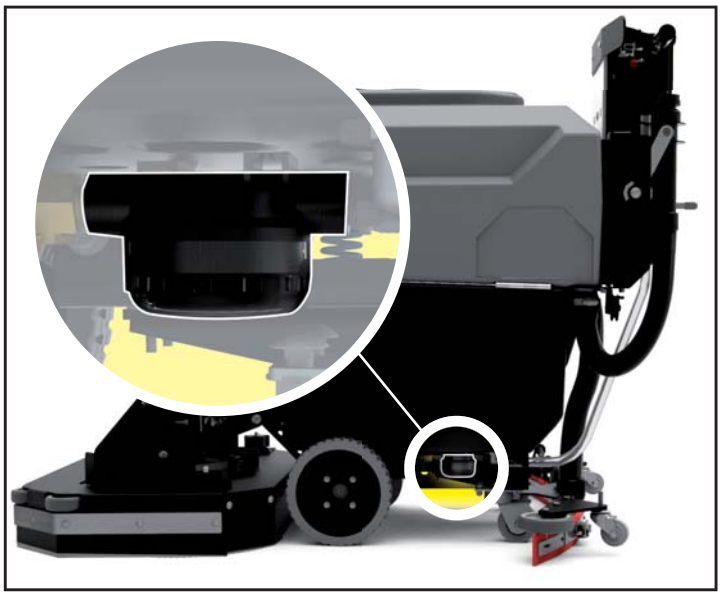

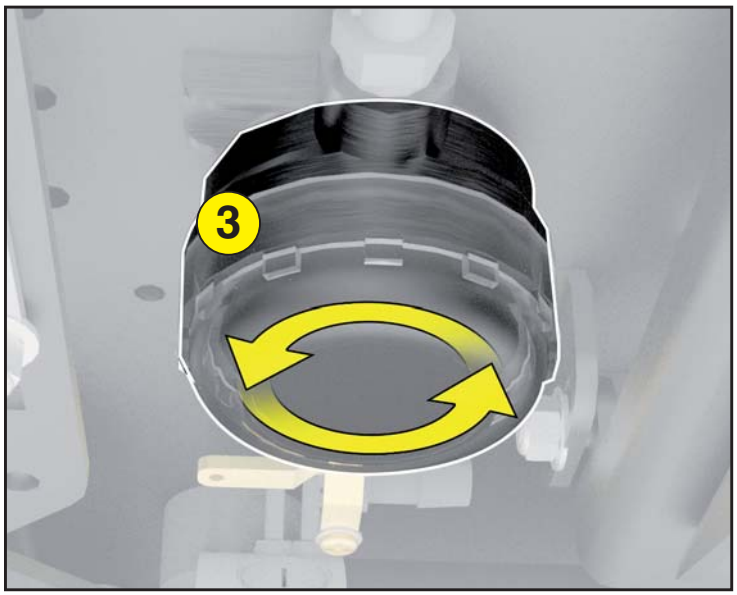

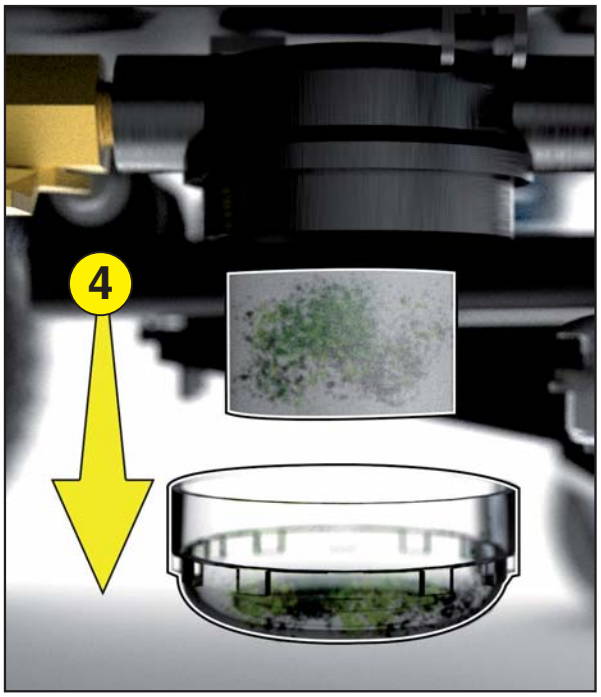

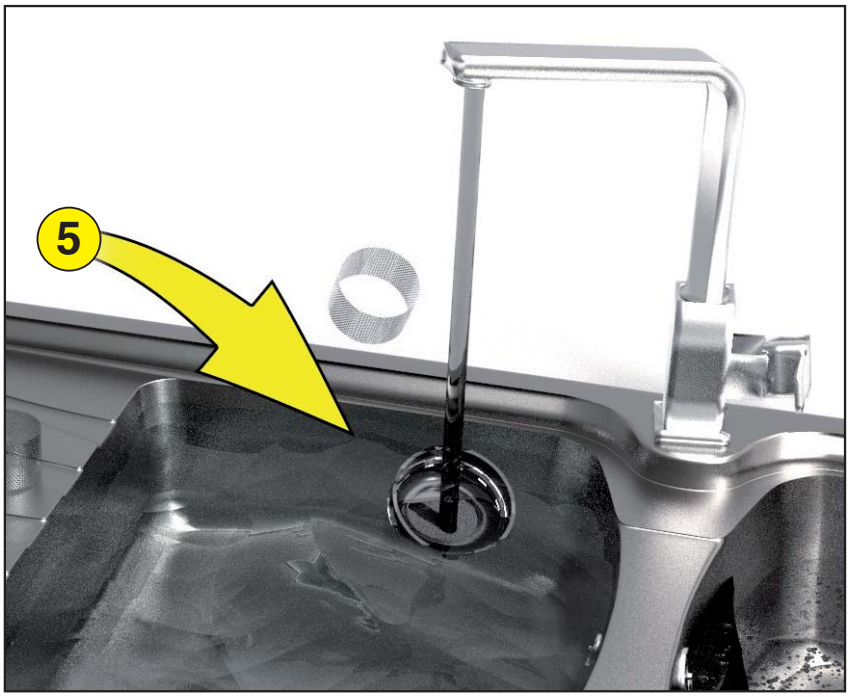

Questions? Call 877-401-0730 Use OEM Parts

Squeegee Blade Replacement

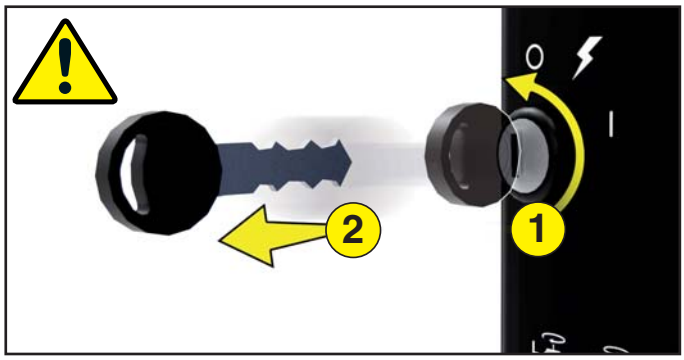

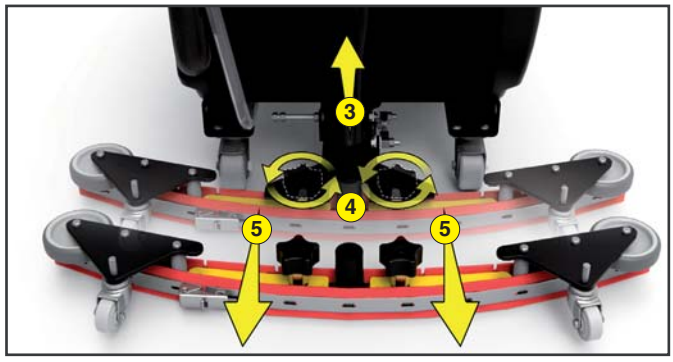

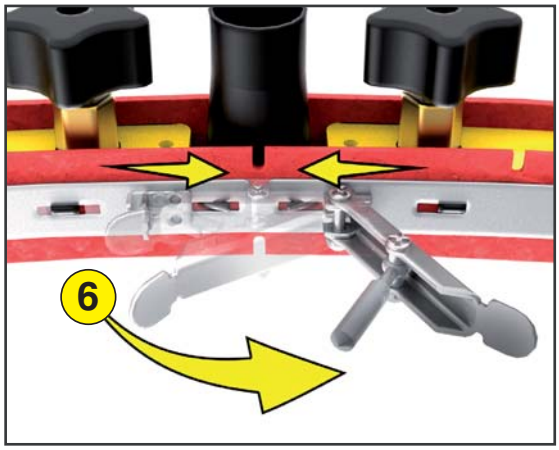

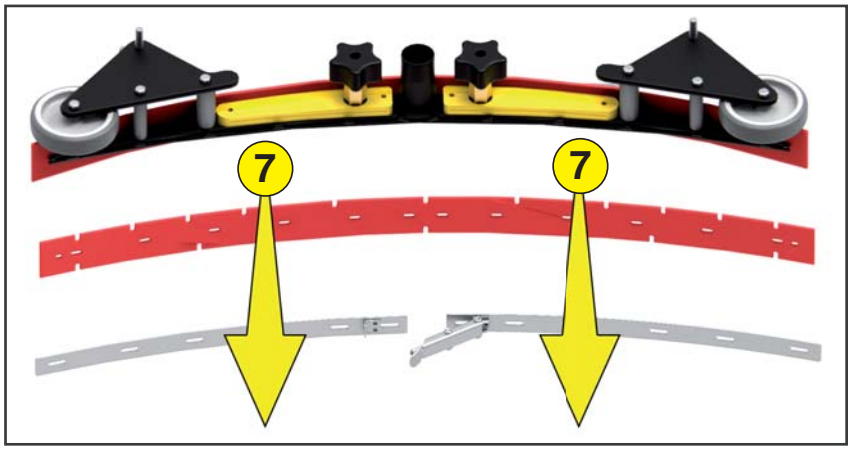

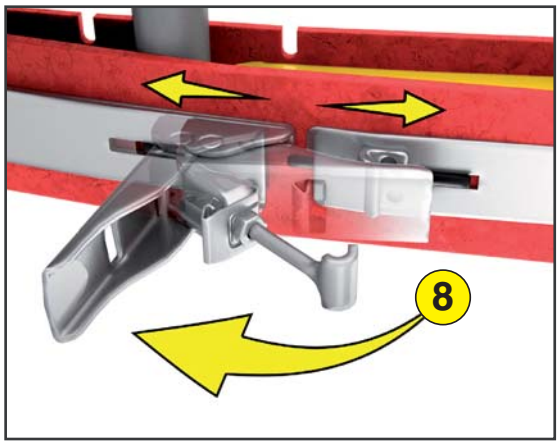

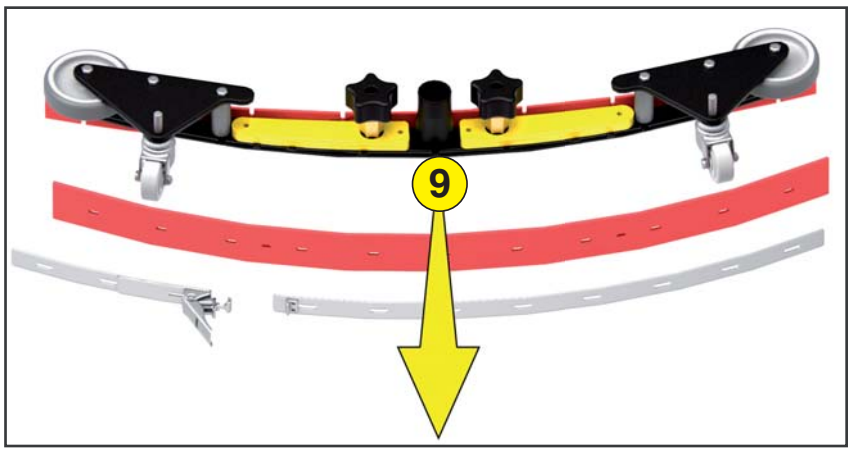

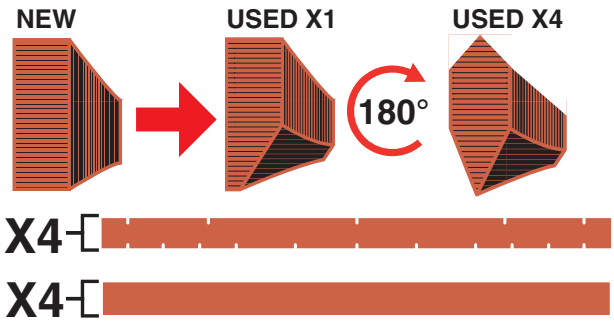

Questions? Call 877-401-0730 Use OEM Parts

Drain Solution Tank

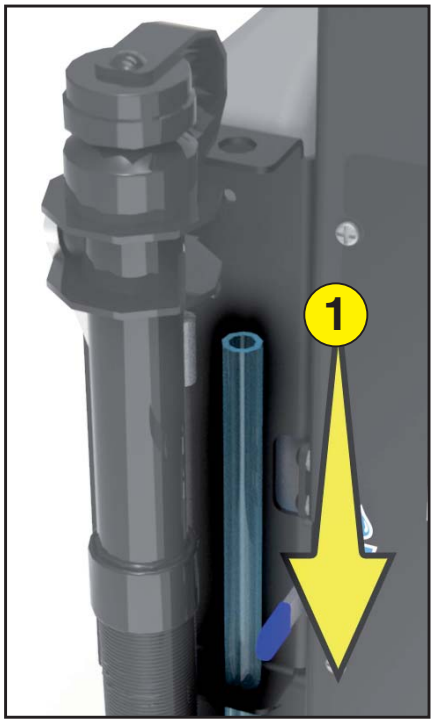

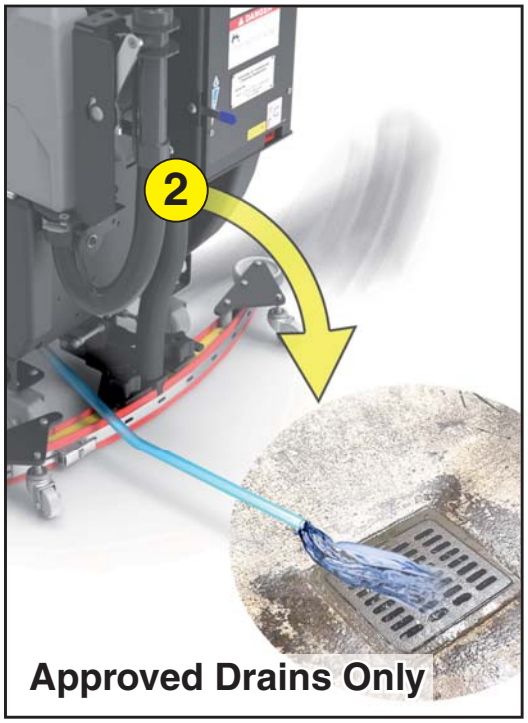

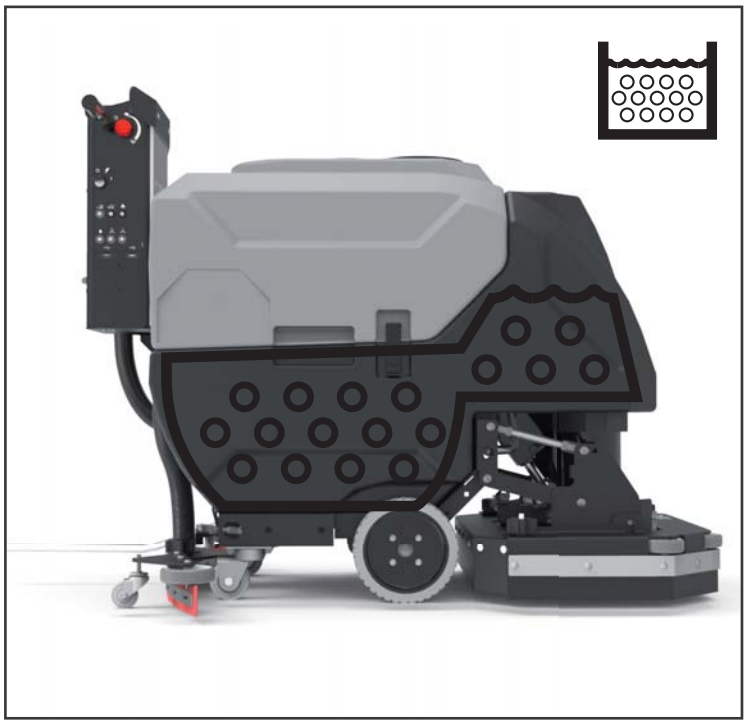

Questions? Call 877-401-0730 Use OEM Parts

Deck Shroud Curtain Replacement

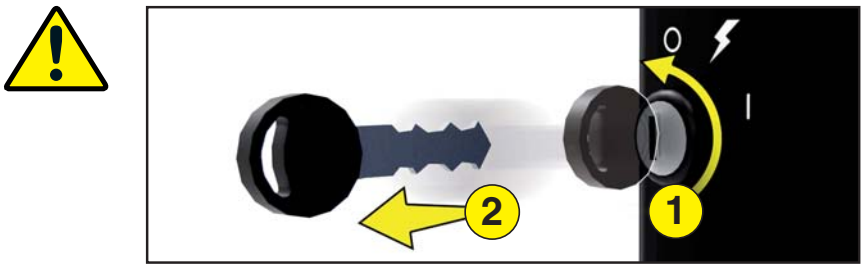

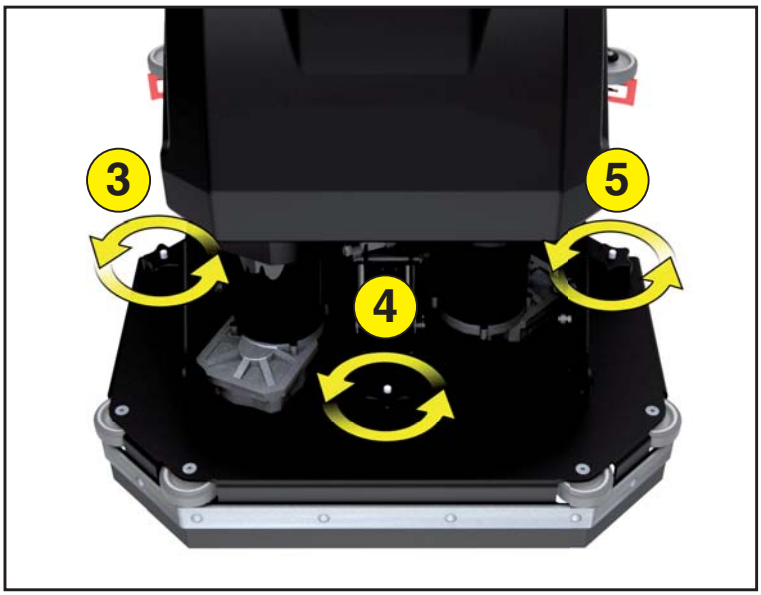

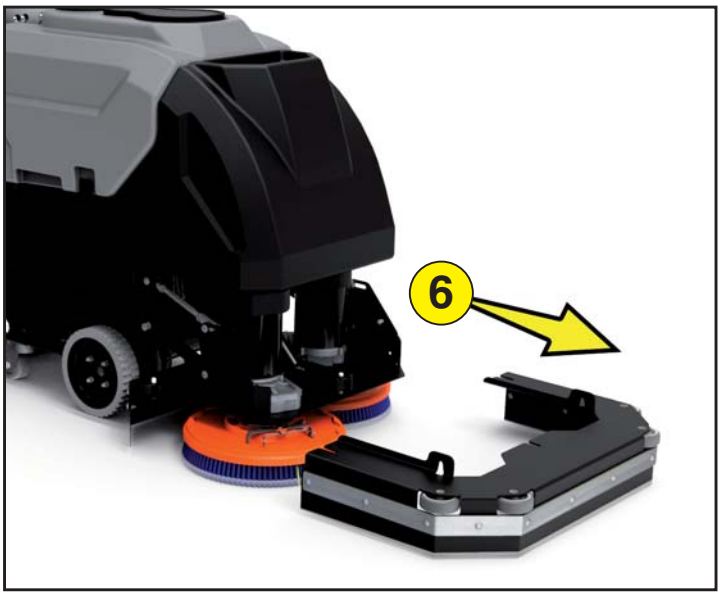

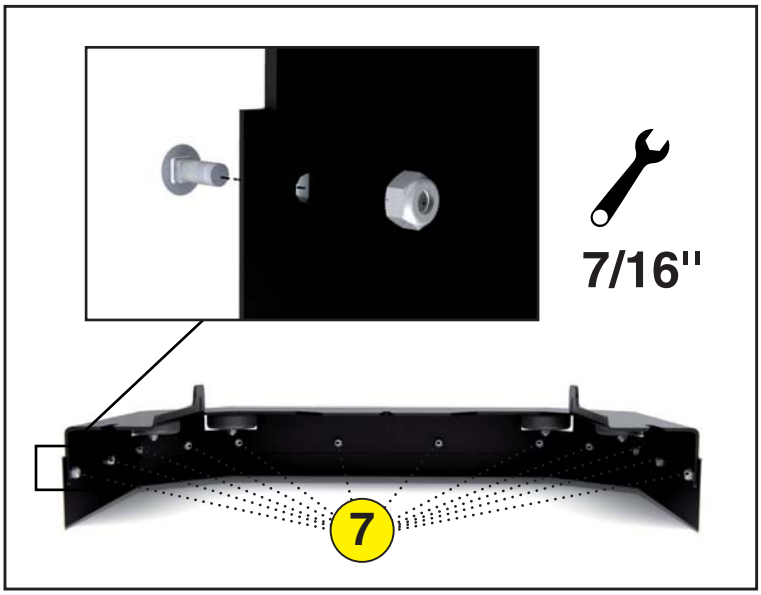

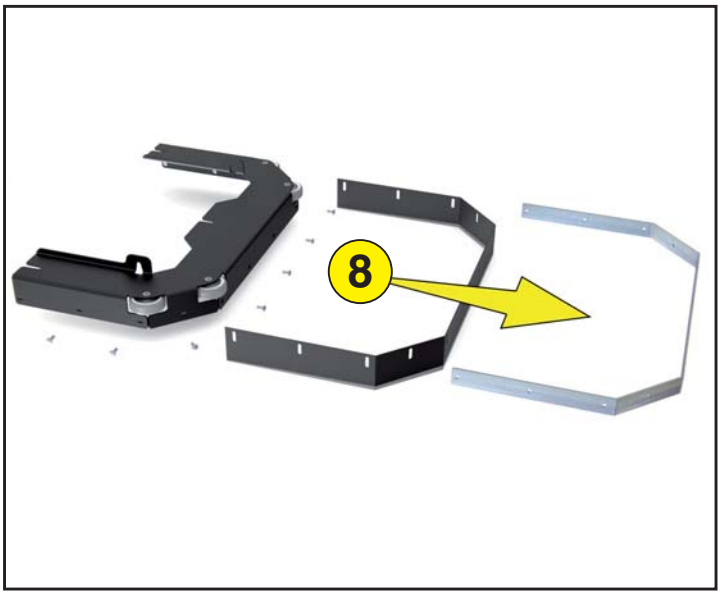

Cylindrical Side Wiper Replacement

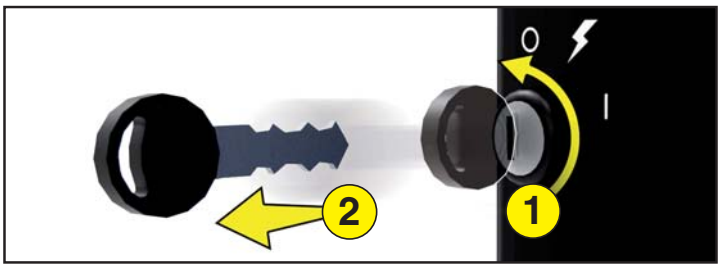

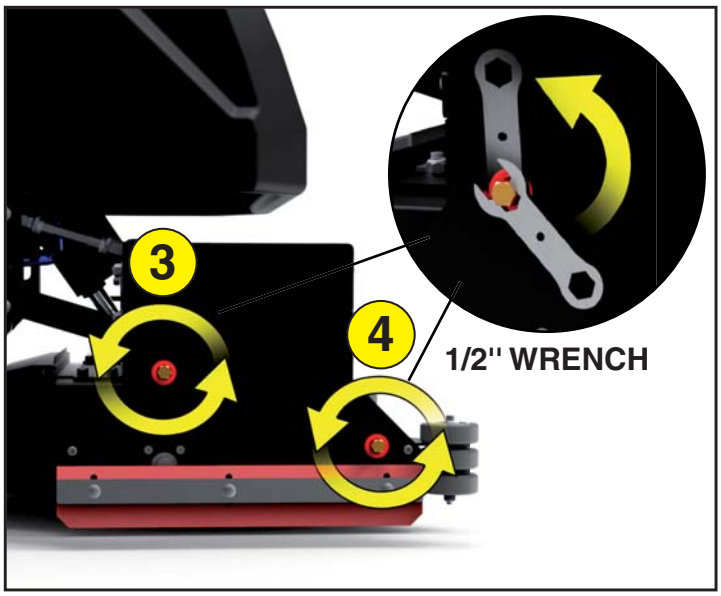

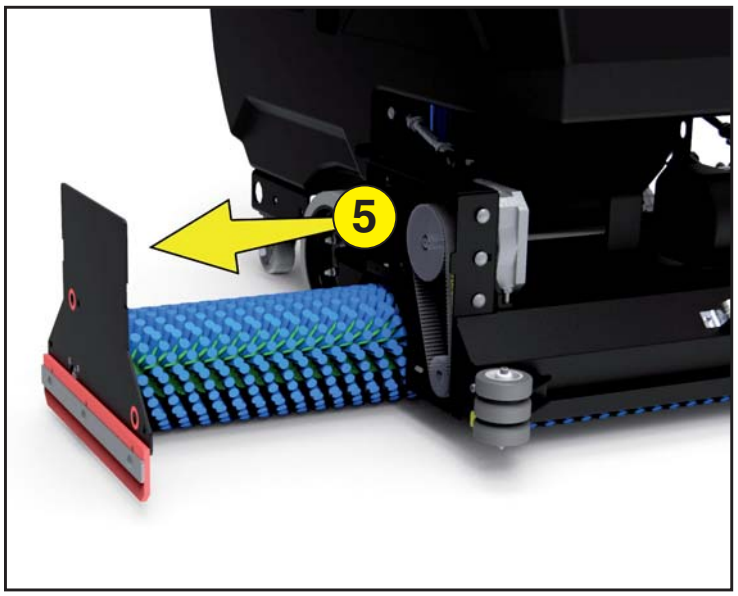

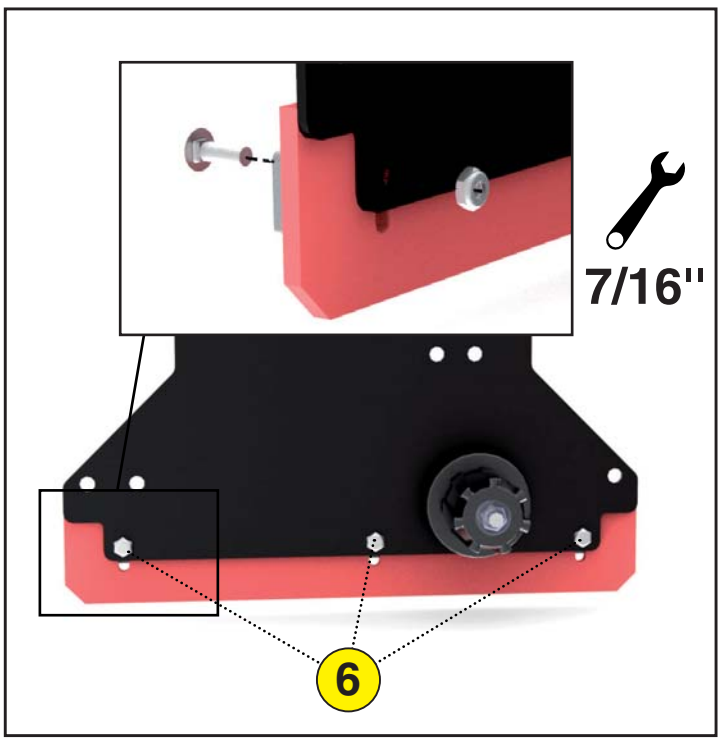

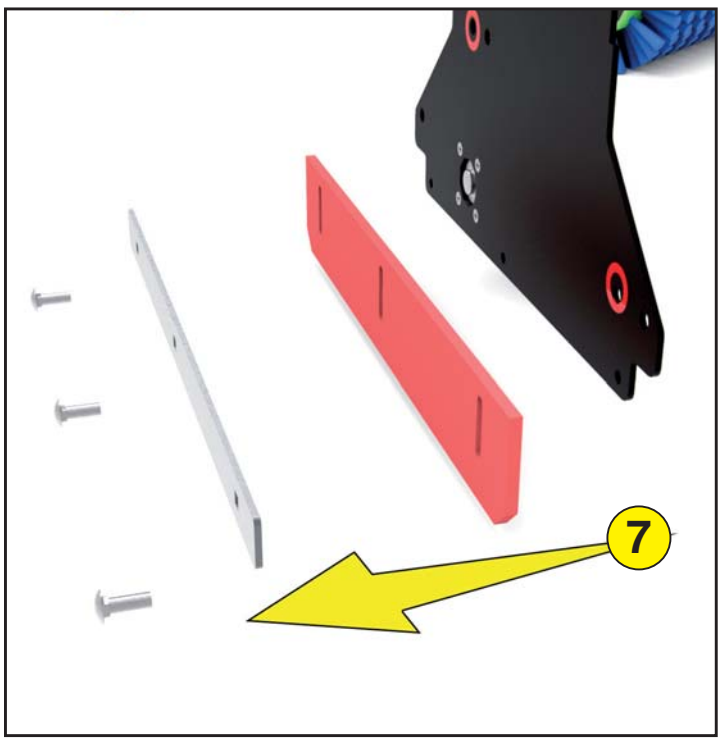

Deck Leveling

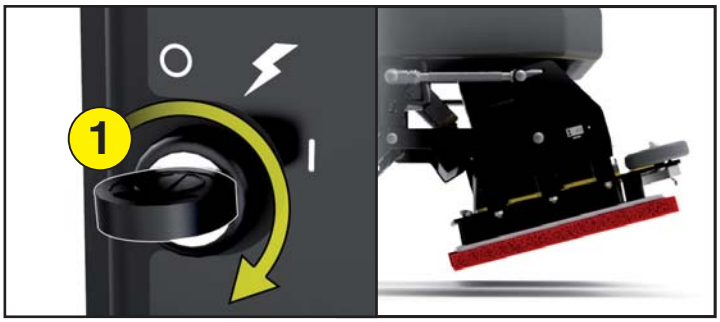

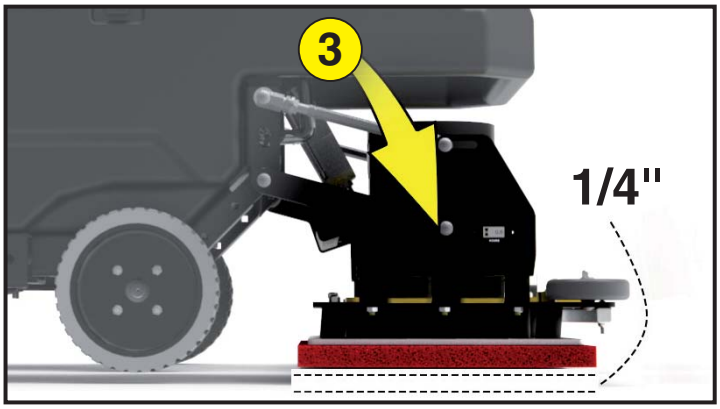

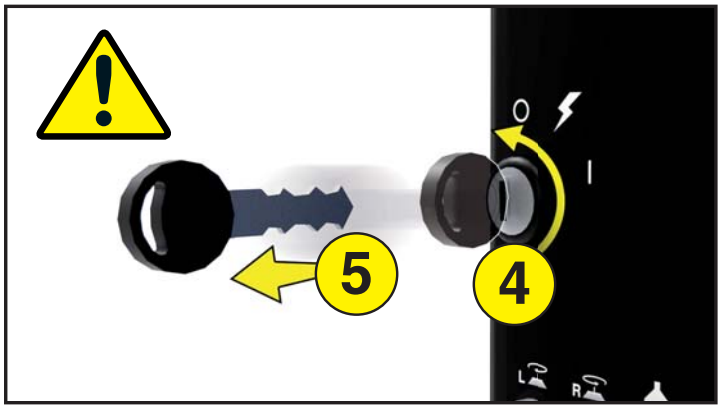

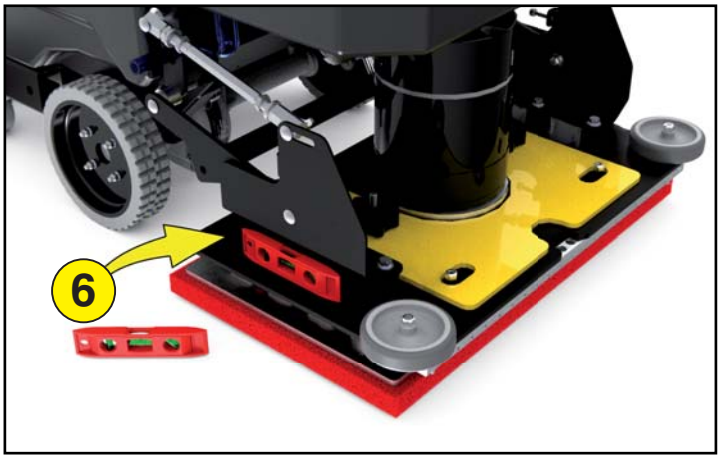

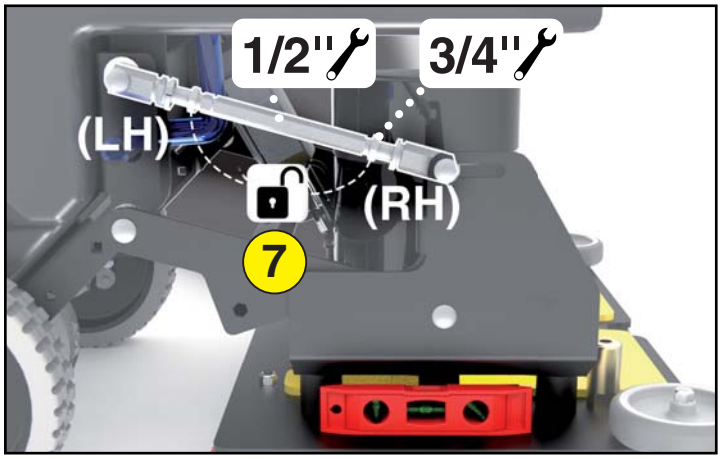

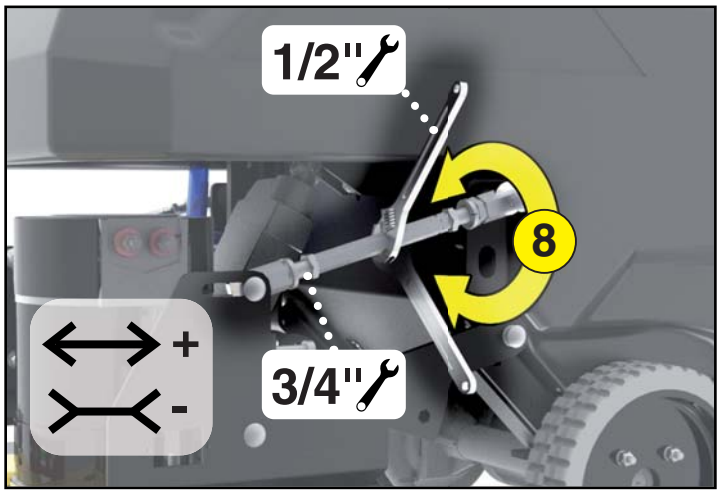

EDGE PADS AND SCREENS:

DESCRIPTION	24"×14" SCRUBDECK	28"×14" SCRUBDECK
White Pad	N/A	EDGE-4054
Red Pad	EDGE-2404	EDGE-4053
Blue Pad	EDGE-2403	EDGE-4052
Green Pad	EDGE-2402	EDGE-4051
Black Pad	EDGE-2401	EDGE-4050
White Driver Pad	N/A	EDGE-4058
60 Grit Sand Screen	N/A	EDGE-4059
80 Grit Sand Screen	N/A	EDGE-4060
100 Grit Sand Screen	N/A	EDGE-4061
120 Grit Sand Screen	N/A	EDGE-4062
150 Grit Sand Screen	N/A	EDGE-4063
400 Grit HD Non Woven Polishing Pad	N/A	300-2014400
800 Grit HD Non Woven Polishing Pad	N/A	300-2014800
1500 Grit HD Non Woven Polishing Pad	N/A	300-20141500
3000 Grit HD Non Woven Polishing Pad	N/A	300-20143000
6000 Grit Diamond Poly Pad	N/A	EDGE-4070
Tile/Grout Renovator Pad	N/A	EDGE-4048
Dominator HD Strip Pad	N/A	EDGE-4055
Maroon ECO Prep Pad	EDGE-2407	EDGE-4056
Microfiber Pad	EDGE-2436	EDGE-6036

Common Wear Parts

ROUND DISK BRUSHES:

NOTICE

The ## in Disk Column Denotes Desk Pad Size: 14", 16"

BRUSHES	DISK	LEVEL
Midi Grit	706-##C	Medium
Light Grit	706-##PS	Moderate
Nylon	706-##N	Light
Pad Driver	706-##D	
Pad Driver Pad Retainer	#40-433	
Pad Driver Spring Clip	#40-423	

ROUND DISK PADS:

NOTICE

The ## in Disk Column Denotes Desk Pad Size: 14", 16"

DISK PADS	DISK	LEVEL	COLOR
Super Black	##-422BB	Very High	Black
Black	##-422B	High	Black
Brown	##-422BR	High	Brown
Green	##-422G	Medium	Green
Blue	##-422BL	Moderate	Blue
Red	##-422R	Moderate	Red
White	##-422W	Light	White

CYLINDRICAL BRUSHES:

BRUSHES	MODEL 26" CYLINDRICAL	MODEL 30" CYLINDRICAL	LEVEL
Midi Grit	75-246C	75-286C	Medium
Light Grit	75-246PS	75-286PS	Moderate
Nylon	75-246N	75-286N	Light

Squeegee Blade Kits

SQUEEGEE BLADE KITS & COMPLETE SQUEEGEE ASSEMBLIES:

SQUEEGEE SIZE	24" DECK	26" DECK	28" DECK	30" DECK	32" DECK
37" Squeegee	Standard	Standard	Standard	Optional	Optional
41" Squeegee	Optional	Optional	Optional	Standard	Standard

SQUEEGEE SIZE	LINATEX BLADE KIT	GUM RUBBER BLADE KIT	URETHANE BLADE KIT	COMPLETE SQUEEGEE ASSEMBLIES
37" Squeegee	237-770L	237-770G	237-770U	237-7180
41" Squeegee	241-770L	241-770G	241-770U	241-7180

SQUEEGEE MATERIAL:	USED FOR:
LINATEX	Provides best wear and tear resistance. Not designed for use with harsh chemicals.
URETHANE	Provides best resistance when dealing with harsh chemicals, oils, fuels, etc.
GUM	Provides best drying performance on rough/grouted floor types by sealing over irregularities. Short life.

NOTICE

Squeegee blade kits include (1) Rear Blade, (1) Front Blade, and (2) Caster Wheels with hardware.

NOTICE

Squeegee Assemblies (complete) listed above all come with Linatex blades.

NOTICE

Size is denoted by label on top squeegee.

PM Sheet

L-Series Scrubber PM Sheet

CUSTOMER & MACHINE INFORMATION			
Customer:			Email:
Address:			Phone:
City:	State:	Zip:	Contact:
Serial #:	Model #:		Work Order #:

NOTE: Start with Machine filled at least with ½ Tank of water. Turn ON Machine and Test Functionality of Machine

CHECK OPERATION & CONDITION OF	IN SPEC	REPAIR	PROBLEM
Key Switch			
Battery Gauge			
Deck Up / Down – Brush Switch			
Brush Pressure +/- Toggle (Optional)			
Vacuum Switch - ON / OFF			
Squeegee Lever - Up/Down			
Solution Switch - ON/OFF			
Solution Flow Lever +/-			
Green Drive Buttons - L & R			
Reverse Toggle Switch			
E-Stop (Optional)			

NOTE: Drain Solution & Recovery Tank fully. Rinse out Recovery Tank

CLEAN & INSPECT – SOLUTION TANK	IN SPEC	REPAIR	PROBLEM
Solution Fill Screen - Mesh			
Solution Fill Hose (Optional)			
Solution Inline Filter			
Vacuum Muffler Drain Hose			
Battery Drain Hose			

BRUSH CONDITION – SCRUB DECK			
Deck Curtains/Wipers	Good	Worn	Needs Replacement
Brush Sockets: (2-Disk)/(4-Cylindrical)	Good	Worn	Needs Replacement
Brush Drivers: (2-Disk)/(4-Cylindrical)	Good	Worn	Needs Replacement
Scrub Brush Fiber Length	Brush 1 Length:	Brush 2 Length:	Rotated Brushes: Y / N

CLEAN & INSPECT – SCRUB DECK	IN SPEC	REPAIR	PROBLEM
Scrub Deck Linkage Pivot Points			
Scrub Deck Lift Actuator			
Scrub Deck Level (Orbital Only)			
Scrub Motor Wires			

CLEAN & INSPECT - SQUEEGEE	IN SPEC	REPAIR	PROBLEM
Remove and Wipe off Squeegee			
Check and Rotate Blades as Needed			
Caster Wheels and Height			
Pitch Adjust			
Check Pivot and Knobs			
Squeegee Vac Hose			

CLEAN & INSPECT – RECOVERY TANK	IN SPEC	REPAIR	PROBLEM
Recovery Tank Lid & Gasket			
Vacuum Float Ball Screen			
Vacuum Box White Filter			
2” Round Final Vac Screen			
Solution Site Tube			

CLEAN & INSPECT – DRIVE	IN SPEC	REPAIR	PROBLEM
Drive Wheels & Casters Condition			
Grease Caster Swivel			

L-Series Scrubber PM Sheet

BATTERY #1	HYDROMETER READING	WATER CLARITY (Circle One)	WATER LEVEL (Circle One)
Cell A		Clear Dark	Overfilled Full Low
Cell B		Clear Dark	Overfilled Full Low
Cell C		Clear Dark	Overfilled Full Low
Cell D		Clear Dark	Overfilled Full Low
Cell E		Clear Dark	Overfilled Full Low
Cell F		Clear Dark	Overfilled Full Low
BATTERY #2	**HYDROMETER READING**	**WATER CLARITY (Circle One)**	**WATER LEVEL (Circle One)**
Cell A		Clear Dark	Overfilled Full Low
Cell B		Clear Dark	Overfilled Full Low
Cell C		Clear Dark	Overfilled Full Low
Cell D		Clear Dark	Overfilled Full Low
Cell E		Clear Dark	Overfilled Full Low
Cell F		Clear Dark	Overfilled Full Low
BATTERY #3	**HYDROMETER READING**	**WATER CLARITY (Circle One)**	**WATER LEVEL (Circle One)**
Cell A		Clear Dark	Overfilled Full Low
Cell B		Clear Dark	Overfilled Full Low
Cell C		Clear Dark	Overfilled Full Low
Cell D		Clear Dark	Overfilled Full Low
Cell E		Clear Dark	Overfilled Full Low
Cell F		Clear Dark	Overfilled Full Low

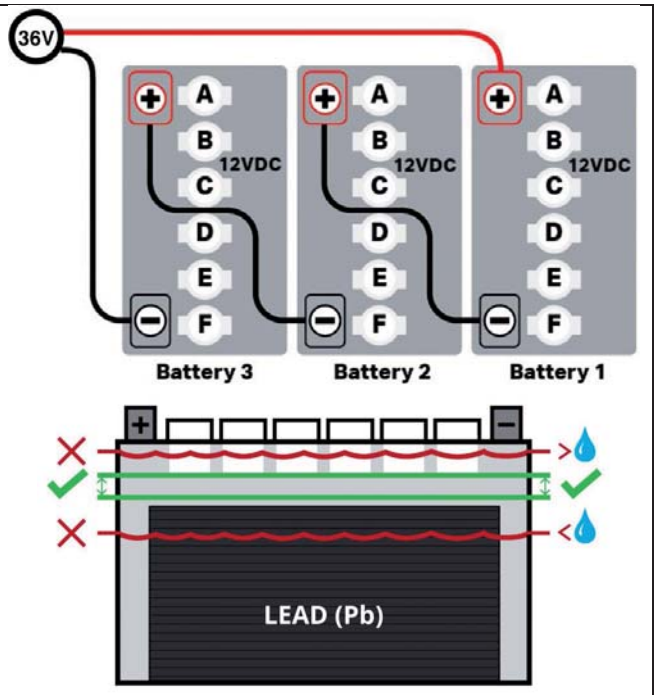

CLEAN & INSPECT - BATTERIES	IN SPEC	REPAIR	PROBLEM
Battery Terminals			
Battery Cables			
Torque Battery Nuts 11ft/lbs			

OPERATE & CONFIRM	IN SPEC	REPAIR	PROBLEM
Fill Solution Tank – ¾ Full			
Scrub & Dry			
Fine Tune Squeegee Adjustments			

COMMENTS & RECOMMENDATIONS

Servicing Distributor:		
Technician's Name:	Date:	Signature:
Customer's Name:	Date:	Signature:

PG. 2

OTHER

Battery Chargers

Console / WET / Domestic Chargers:

AC Power IN: 120VAC / 60Hz
DC Power OUT: 36VDC / 25A

Please refer to OEM Charger Operating Instructions for more information.

Onboard / AGM / International Chargers:

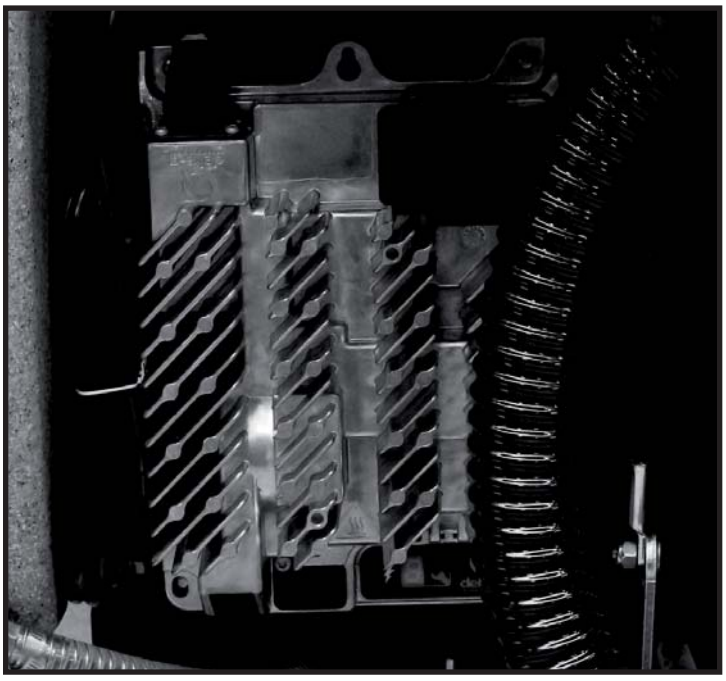

AC Power: 80-270VAC / 50-60Hz
DC Power OUT: 36VDC / 18A

Please refer to OEM Charger Operating Instructions for more information.

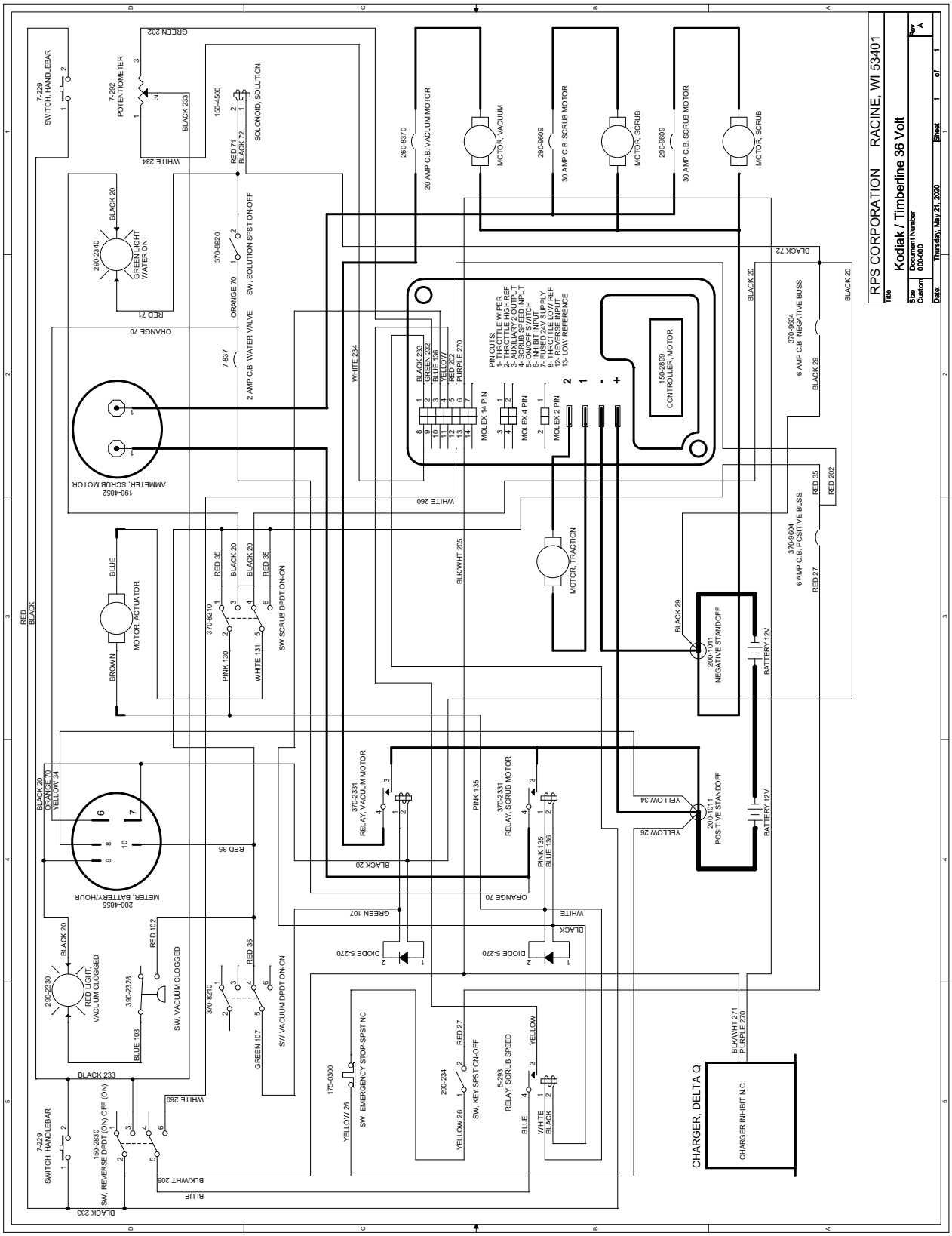
RPS CORPORATION RACINE, WI 53401
Title Kodiak / Timberline 36 Volt
Size Custom
Document Number 000-000
Rev A
Date: Thursday, May 21, 2020
Sheet 1 of 1
MOTOR, TRACTION
MOTOR, ACTUATOR
MOTOR, VACUUM
MOTOR, SCRUB
MOTOR, SCRUB
20 AMP C.B. VACUUM MOTOR
30 AMP C.B. SCRUB MOTOR
30 AMP C.B. SCRUB MOTOR
150-2899 CONTROLLER, MOTOR
PIN OUTS:
1- THROTTLE WIPER
2- THROTTLE HIGH REF
3- AUXILIARY 2 OUTPUT
4- SCRUB SPEED INPUT
5- ON/OFF SWITCH
6- INHIBIT INPUT
7- FUSED 24V SUPPLY
8- THROTTLE LOW REF
12- REVERSE INPUT
13- LOW REFERENCE
MOLEX 14 PIN
MOLEX 4 PIN
MOLEX 2 PIN
7-229 SWITCH, HANDLEBAR
7-292 POTENTIOMETER
150-4500 SOLONOID, SOLUTION
370-8920 SW. SOLUTION SPST ON-OFF
7-837 2 AMP C.B. WATER VALVE
290-2340 GREEN LIGHT WATER ON
190-4852 AMMETER, SCRUB MOTOR
370-8210 SW SCRUB DPDT ON-ON
370-8210 SW VACUUM DPDT ON-ON
290-2330 RED LIGHT VACUUM CLOGGED
390-2328 SW, VACUUM CLOGGED
200-4855 METER, BATTERY/HOUR
150-2830 SW, REVERSE DPDT (ON)-OFF-(ON)
175-0300 SW, EMERGENCY STOP-SPST NC
290-234 SW, KEY SPST ON-OFF
5-283 RELAY, SCRUB SPEED
370-2331 RELAY, VACUUM MOTOR
370-2331 RELAY, SCRUB MOTOR
DIODE S-270
DIODE S-270
370-9604 6 AMP C.B. NEGATIVE BUSS
370-9604 6 AMP C.B. POSITIVE BUSS
200-1011 NEGATIVE STANDOFF
200-1011 POSITIVE STANDOFF
BATTERY 12V
BATTERY 12V
CHARGER, DELTA Q
CHARGER INHIBIT N.C.
BLACK 233
WHITE 234
WHITE 260
BLK/WHT 205
BLK/WHT 271
PURPLE 270
BLACK 20
BLACK 72
BLACK 29
RED 35
RED 202
RED 27
YELLOW 34
YELLOW 26
ORANGE 70
GREEN 107
PINK 135
BLUE 136
RED 102
BLUE 103
PINK 130
WHITE 131
GREEN 232
BLACK 233
WHITE 234
RED 71
BLACK 72
ORANGE 70
RED 71
BLACK 20
YELLOW 34
RED 35
BLACK 20
BLUE
BROWN
RED
BLACK
BLACK 233
BLUE
BLK/WHT 205
WHITE 260
BLACK 20
GREEN 107
ORANGE 70
WHITE
BLACK
BLACK 20
RED 102
BLUE 103
BLACK 233
WHITE 260
YELLOW 26
YELLOW
BLUE
WHITE
BLACK
BLK/WHT 271
PURPLE 270
BLACK 72
BLACK 20
BLACK 20
RED 35
RED 202
BLACK 29
RED 27
YELLOW 34
YELLOW 26

Schematics Adjusted Down Pressure

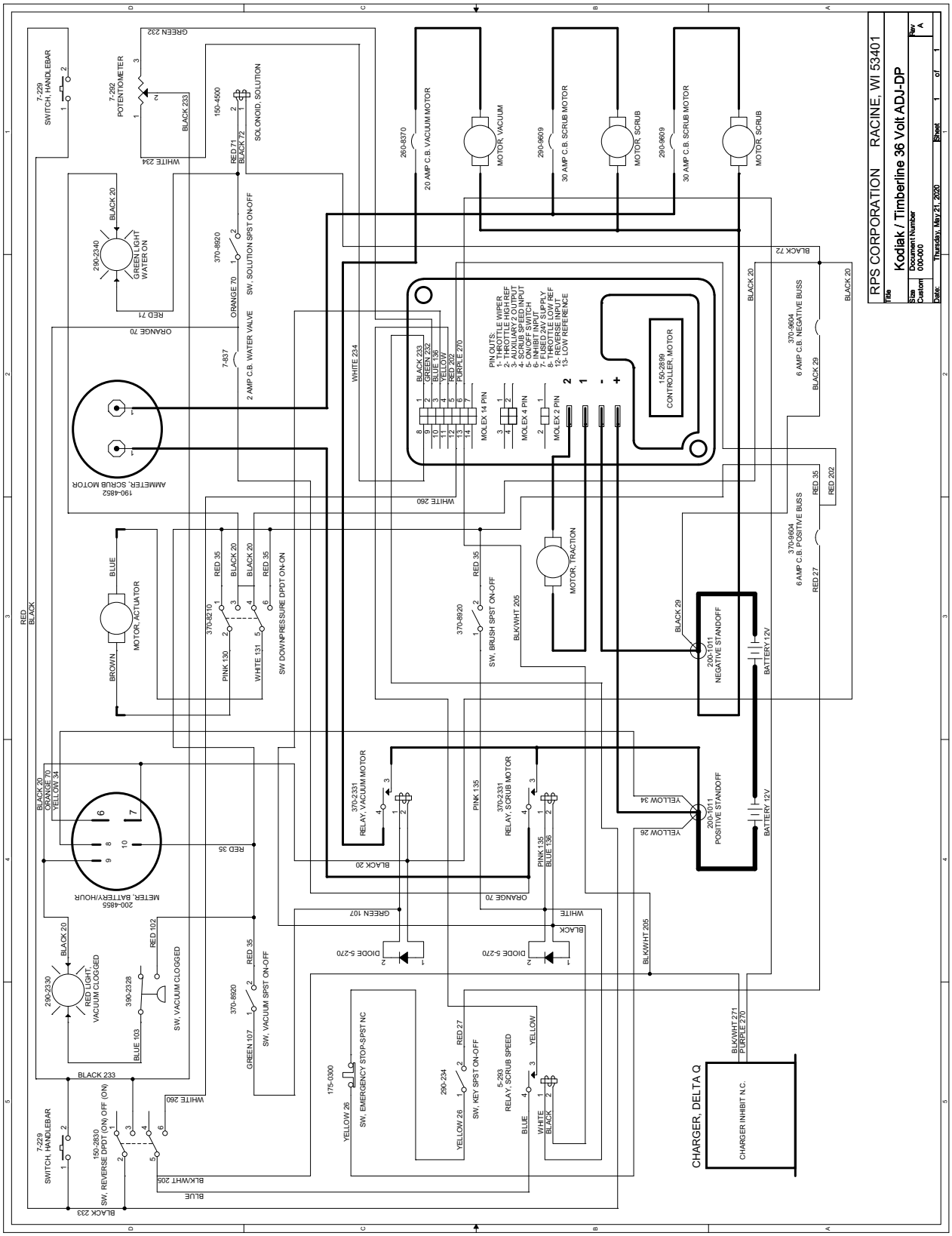

Questions? Call 877-401-0730 Use OEM Parts

Decals

P# 260-1522

P# 260-7201

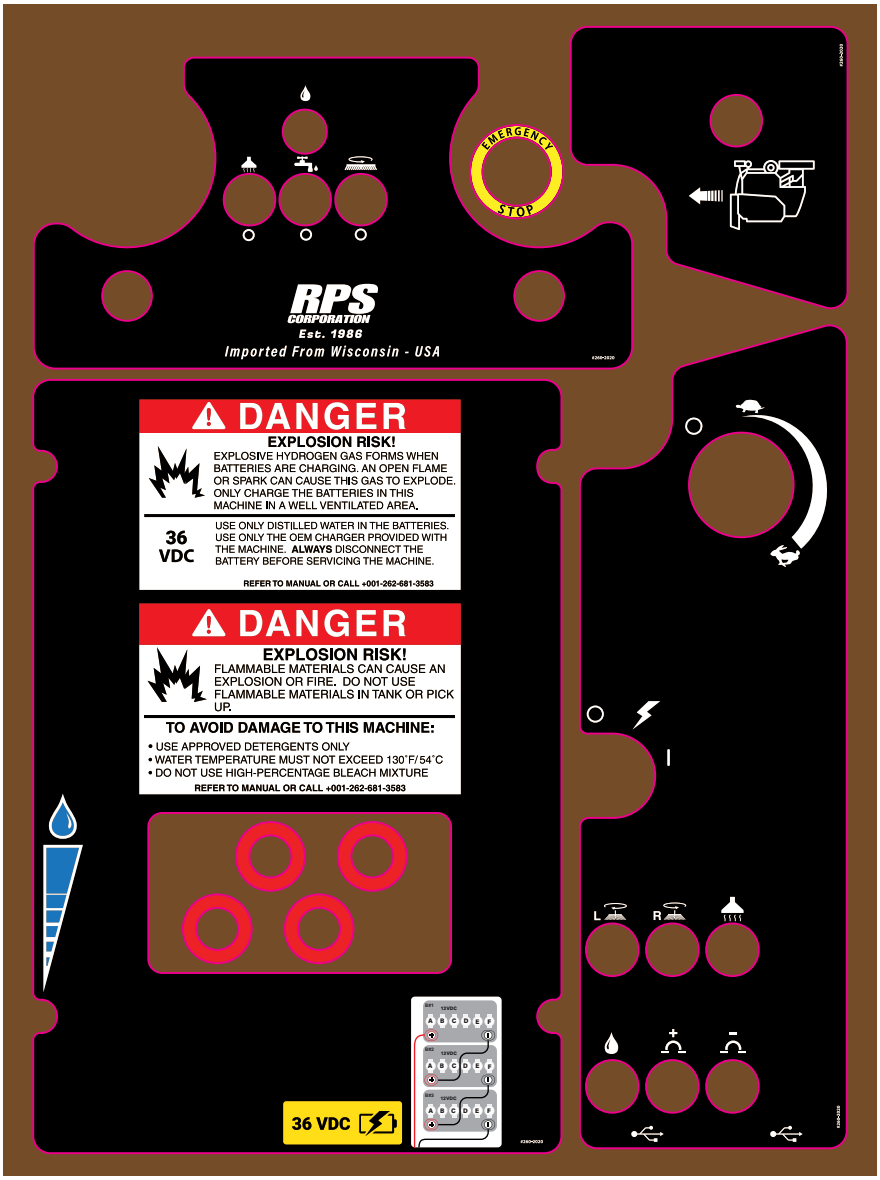

P# 260-2020

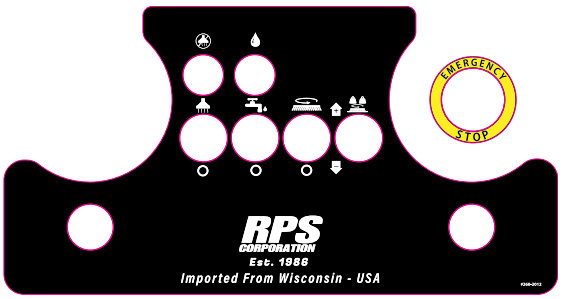

P# 260-2012

P# 260-028D

P# 260-032D

P# 260-026C

P# 260-030C

P# 260-024O

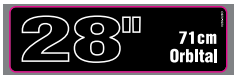

P# 260-028O

BLANK

THIS PAGE WAS INTENTIONALLY LEFT BLANK

BLANK

THIS PAGE WAS INTENTIONALLY LEFT BLANK

www.timberlineclean.com
1711 South Street
Racine, WI 53404 (USA)
262-833-4040 | (877) 401-0730
© 2020 RPS Corporation

V20.153
T-L-SERIES-OP-EN